WORTHINGTON, SKILLING, HELLE & JACKSON — Civil & Structural Engineers

PROJECT: THE WORLD TRADE CENTER | TITLE: CONNECTION DETAIL 880(A) | DATE: 7-14-67

REVISIONS
9-29-67
10-31-67

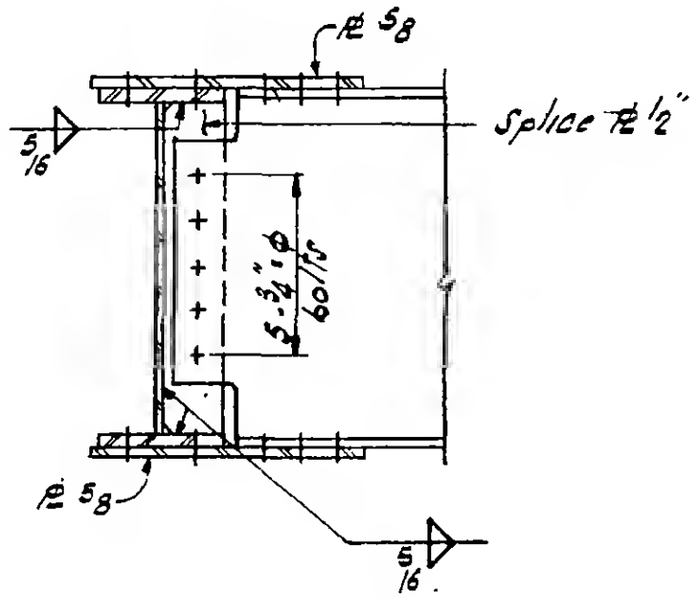


Section a-a

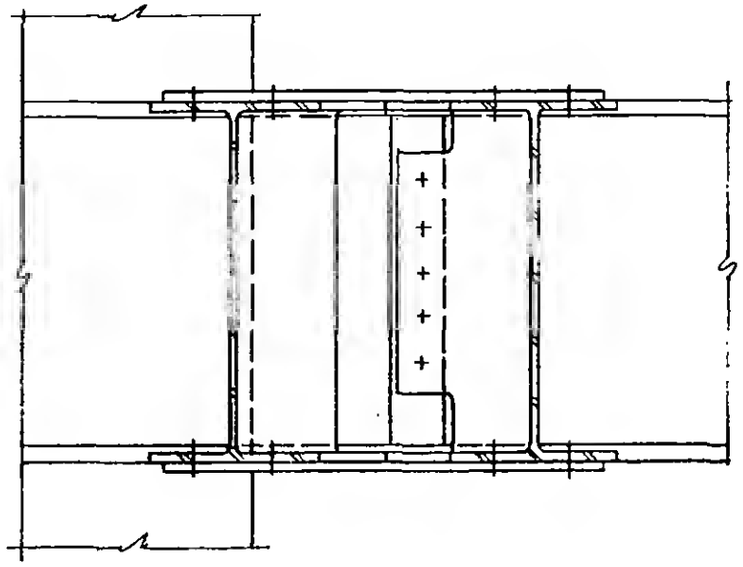

Section b-b

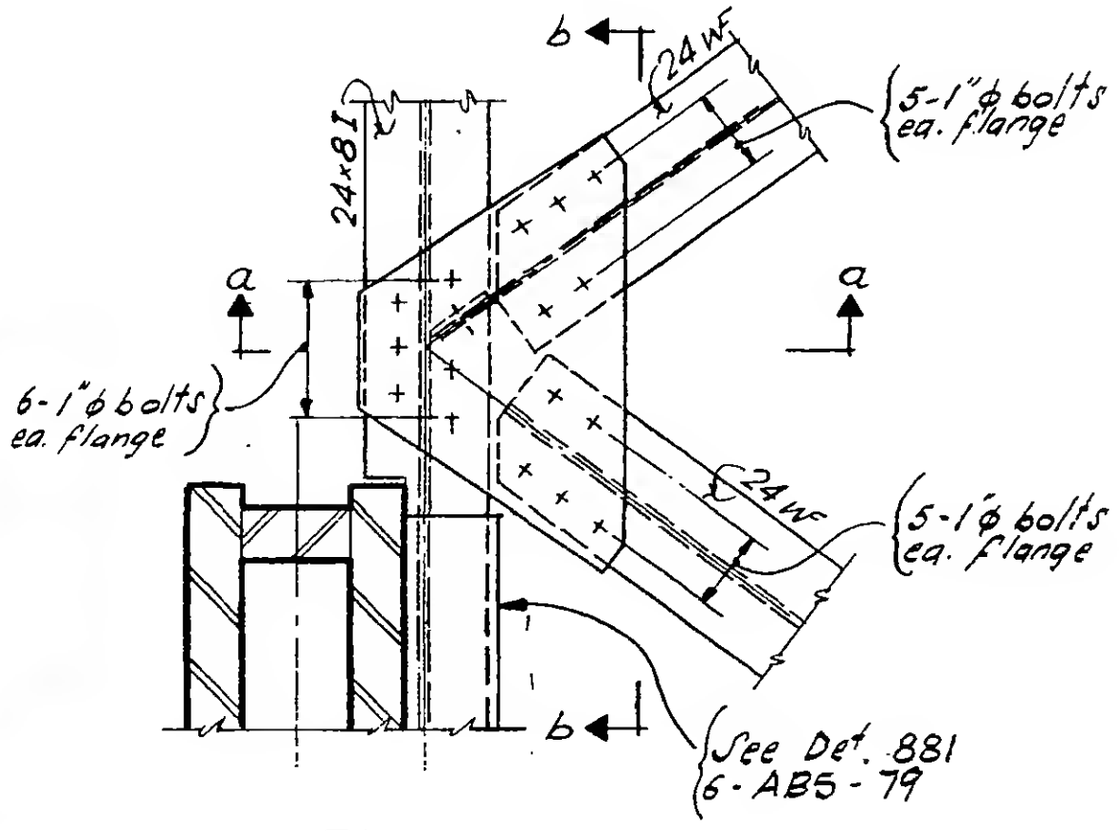


Plan

LICENSED PROFESSIONAL ENGINEER LESLIE E. ROBERTSON No. 24240 UNIVERSITY OF THE STATE OF NEW YORK

6-AB5-78