WORTHINGTON, SKILLING, HELLE & JACKSON — Civil & Structural Engineers

PROJECT THE WORLD TRADE CENTER | TITLE BRACING OF CANT. BEAMS ON 2ND FLOOR | DATE 7-14-67

REVISIONS

10-31-67

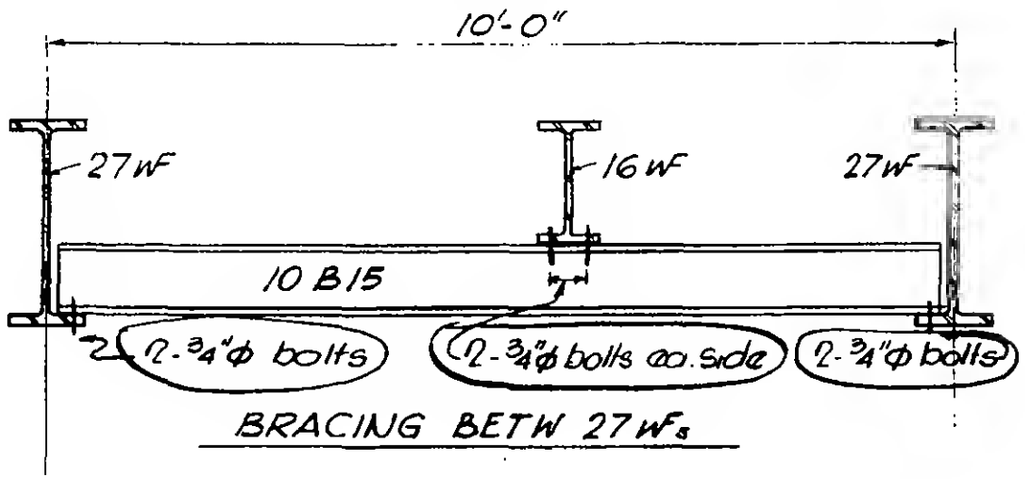

BRACING BETW 27 WFs

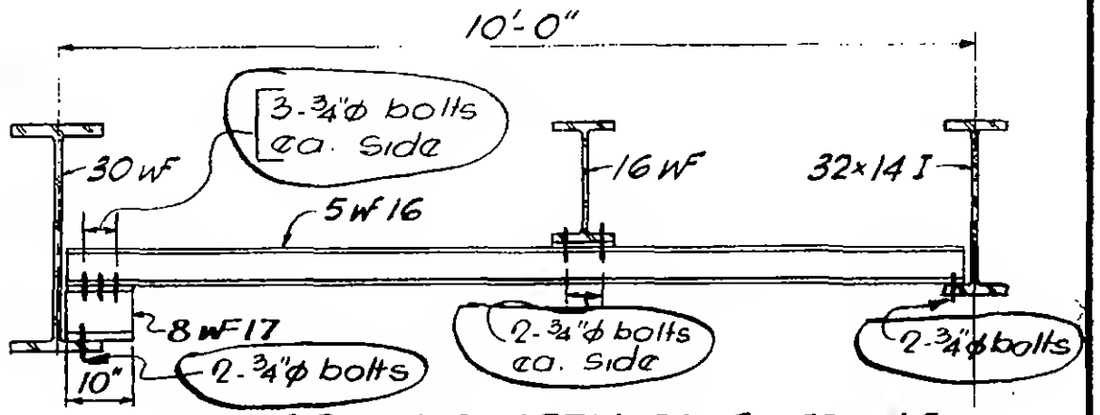

BRACING BETW 30 WF & 32x14 I

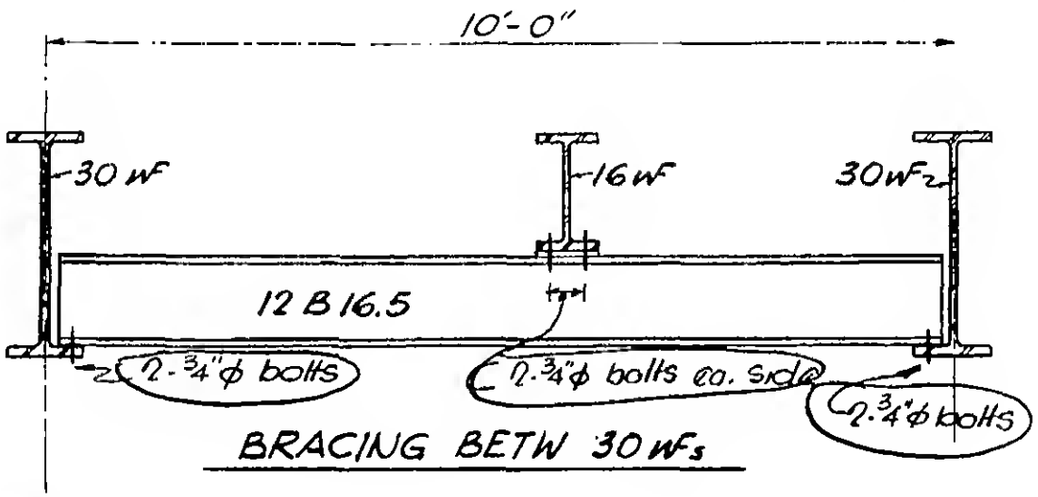

BRACING BETW 30 WFs

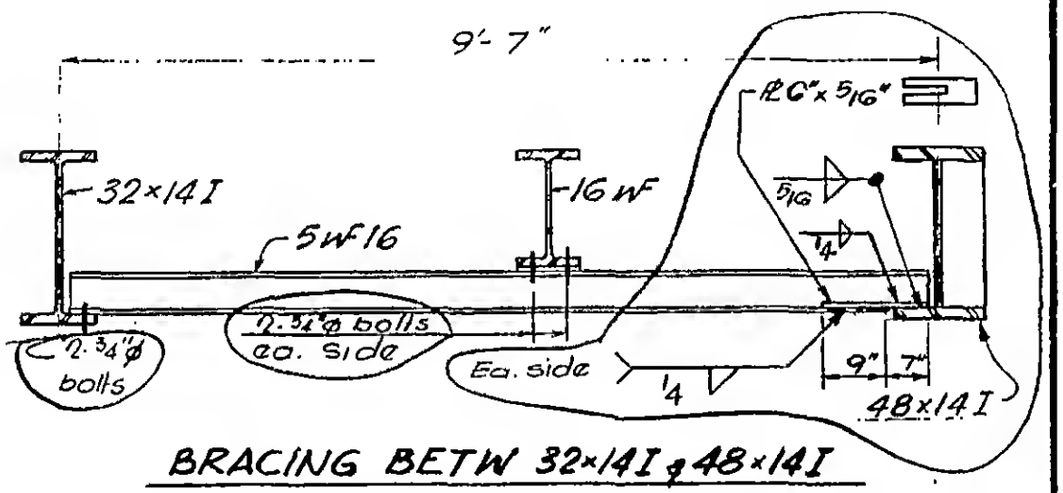

BRACING BETW 32x14 I & 48x14 I

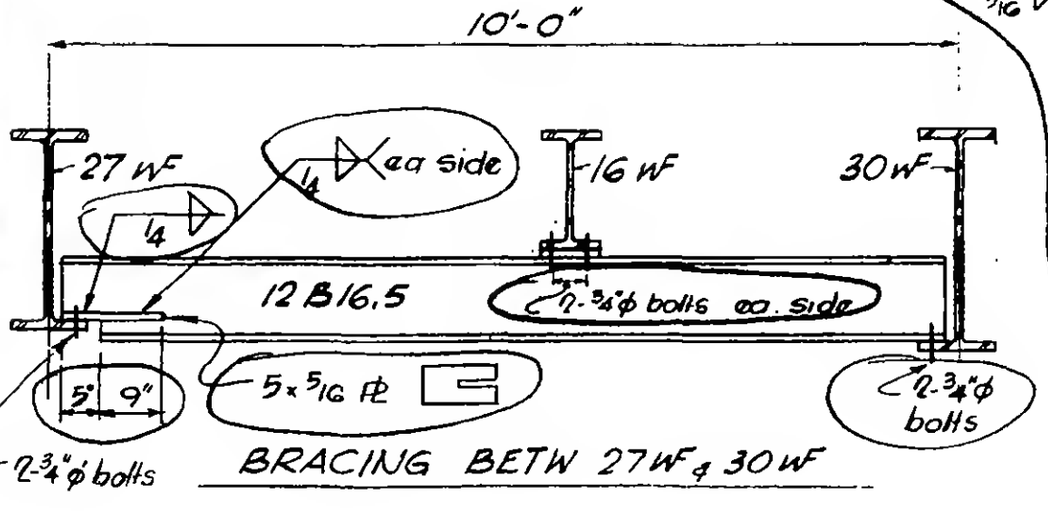

BRACING BETW 27 WF & 30 WF

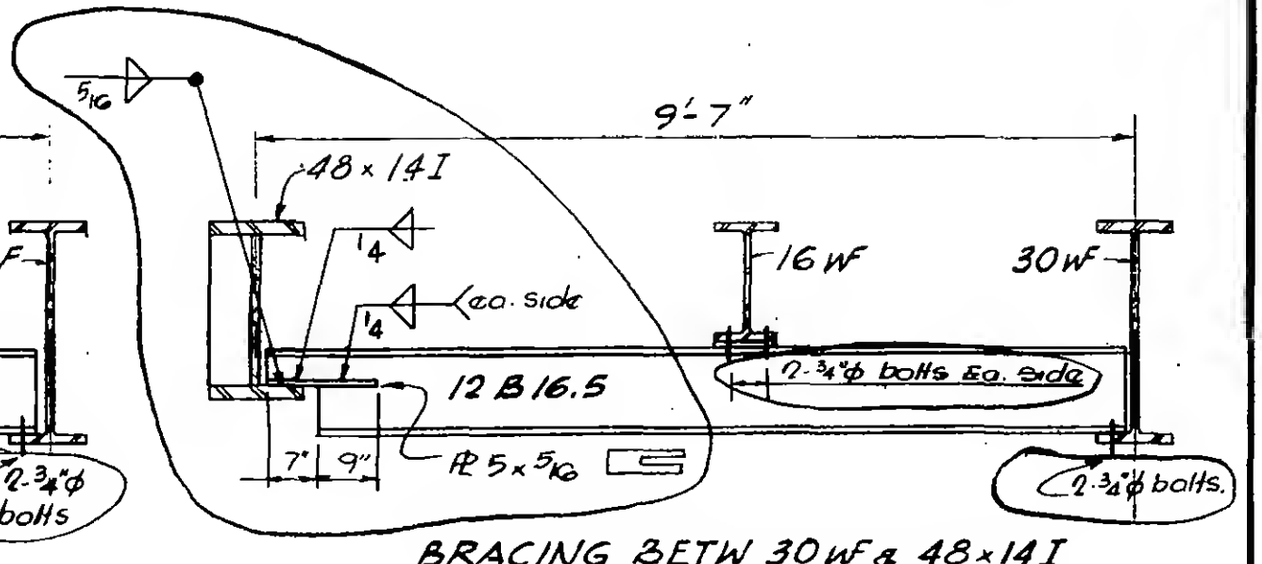

BRACING BETW 30 WF & 48 x 14 I

LICENSED PROFESSIONAL ENGINEER
LESLIE E. ROBERTSON
No. 34360
STATE OF NEW YORK

6-AB5-86