SKILLING - HELLE - CHRISTIANSEN - ROBERTSON Structural & Civil Engineers

PROJECT THE WORLD TRADE CENTER | TITLE BRACING OF CANT BEAMS ON 2ND FLOOR | DATE 10-31-67

REVISIONS

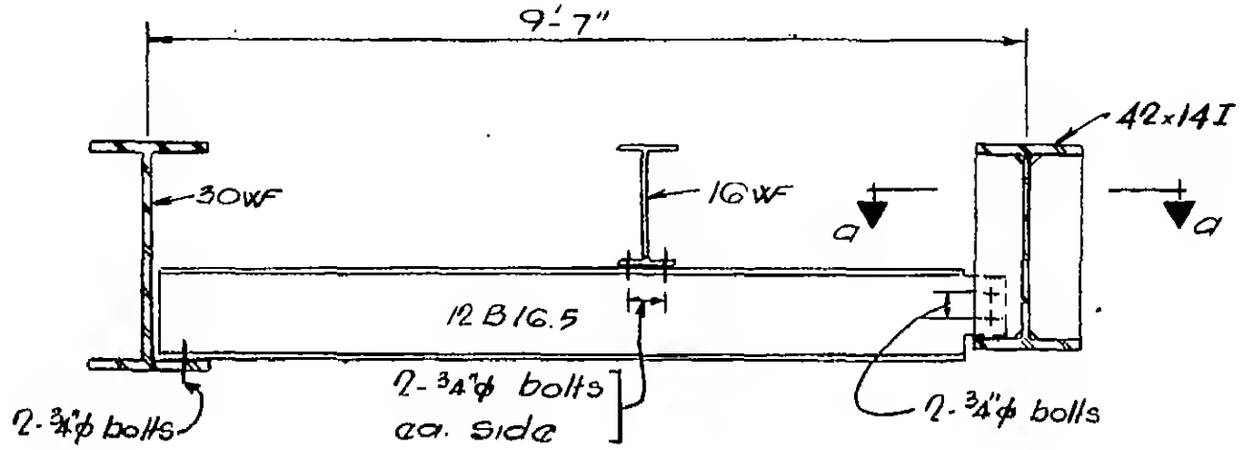

Bracing betw. 30WF & 42x14I

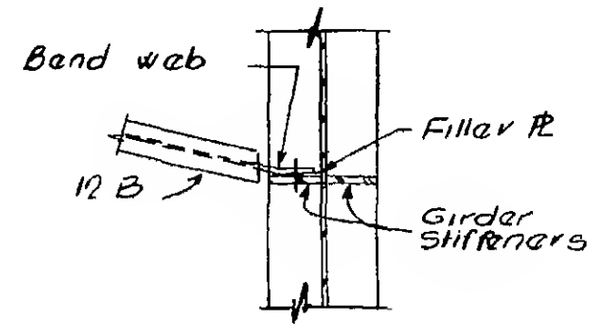

Section a-a

G-AB5-86.1