SKILLING - HELLE - CHRISTIANSEN - ROBERTSON Structural & Civil Engineers

PROJECT THE WORLD TRADE CENTER | TITLE COLUMN REINF AT BRACING COL: 501, 508, 1001, 1008 | DATE 8.14.67

REVISIONS

9-29-67

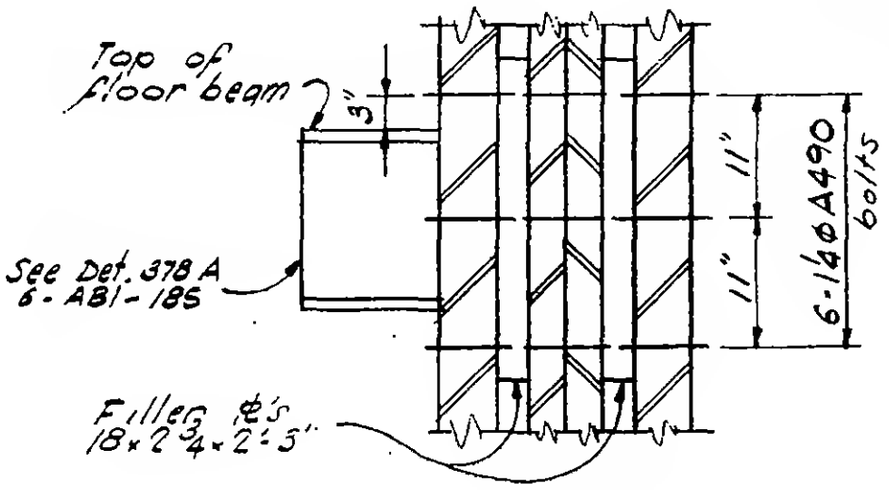

Section a-a

El. 344'-0"
El. 355'-6"
El. 378'-6"

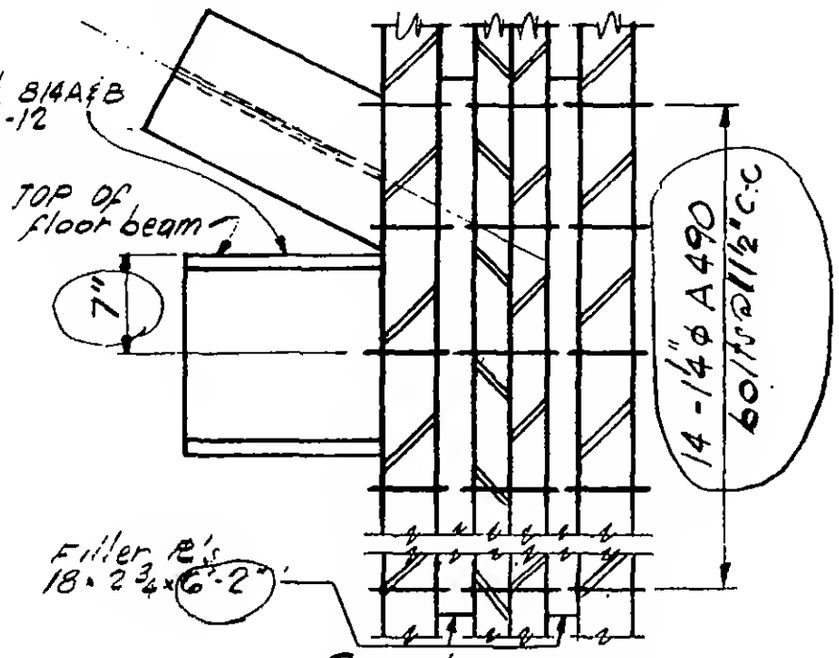

Section a-a

El. 332'-0"

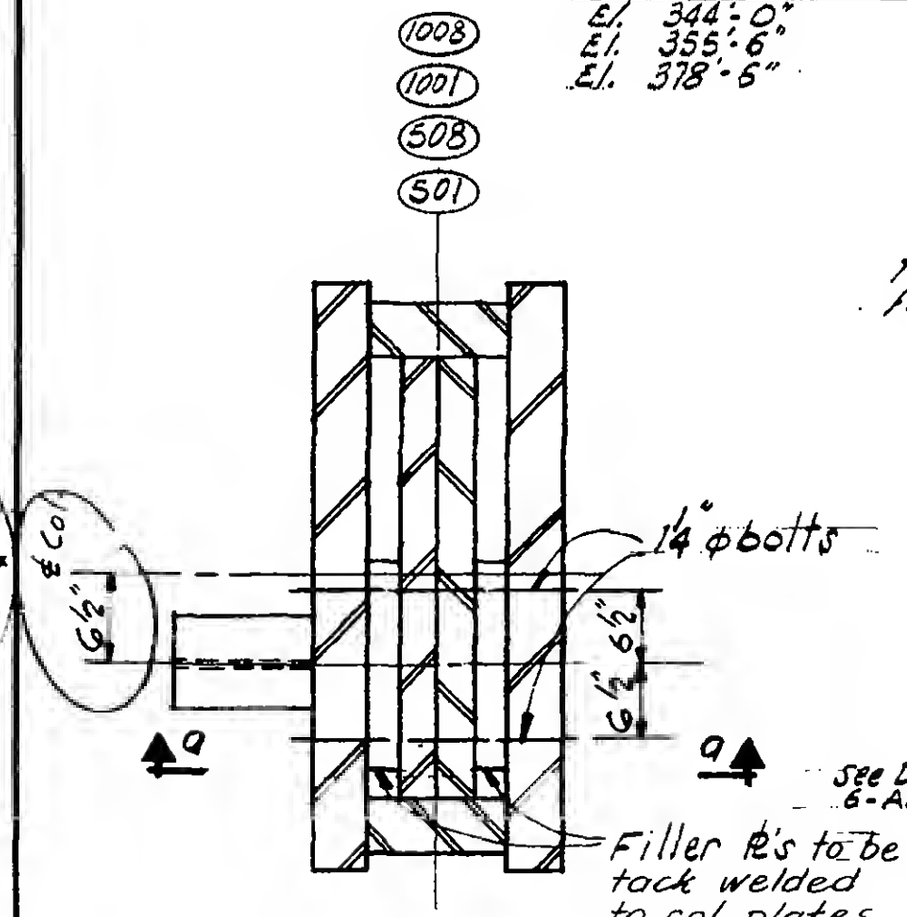

PLAN

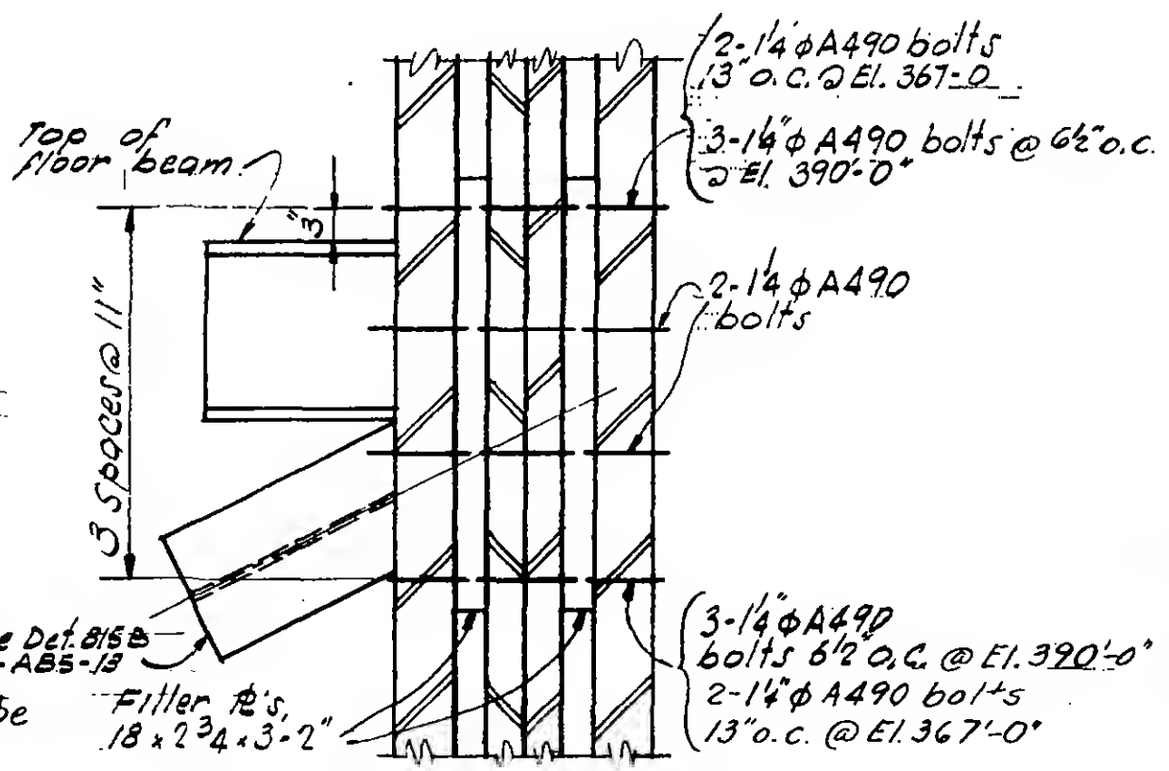

Section a-a

El. 390'-0" & El. 367'-0"

6-AB5-87

LICENSED PROFESSIONAL ENGINEER
LESLIE E. ROBERTSON
No. 34360
UNIVERSITY OF THE STATE OF NEW YORK