SKILLING - HELLE - CHRISTIANSEN - ROBERTSON Structural & Civil Engineers

PROJECT THE WORLD TRADE CENTER | TITLE COL. REINF. AT BRACING 502, 507, 1002 & 1007 | DATE 8-14-67

EVISIONS

9-29-67

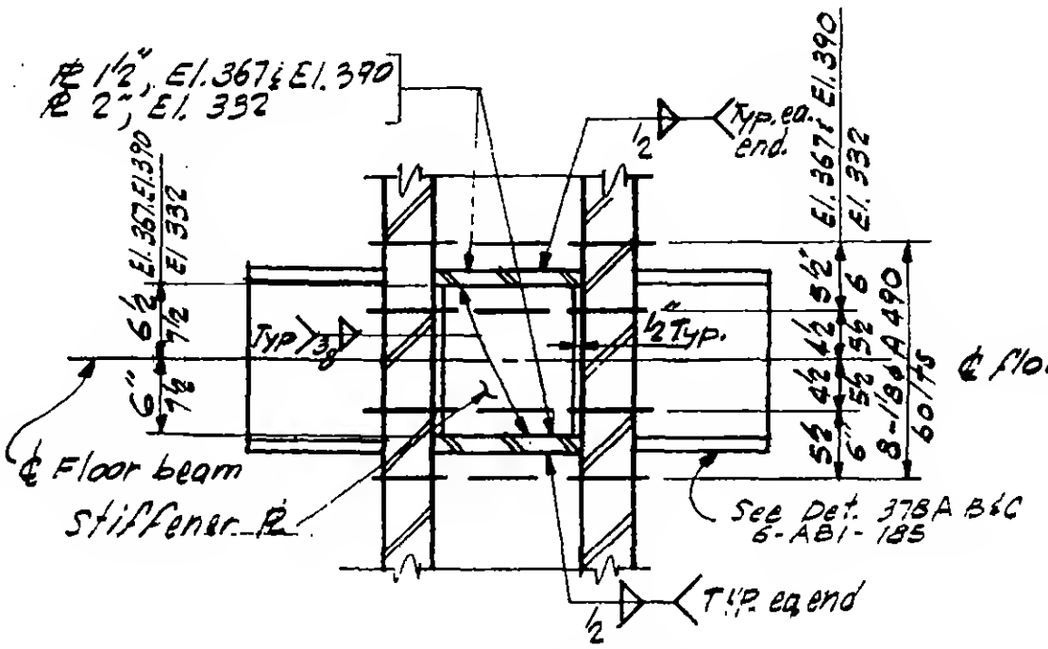

Section a-a
El. 332
El. 367
El. 390

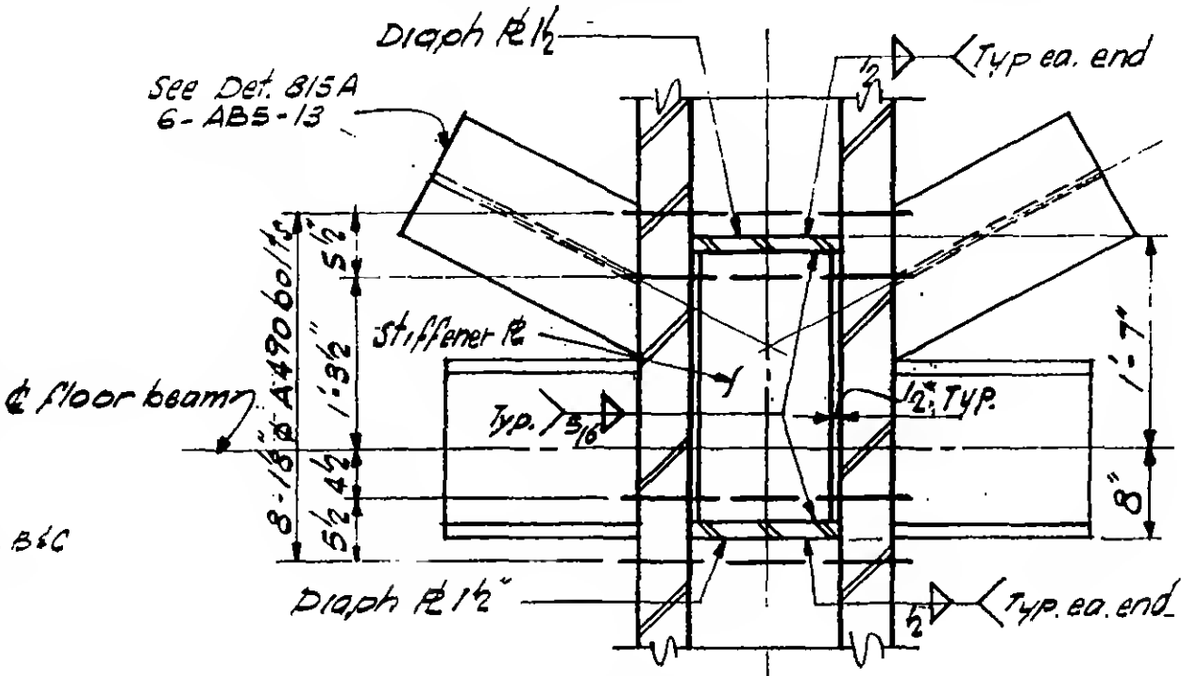

Section a-a
El. 355'-6"
El. 378'-6"

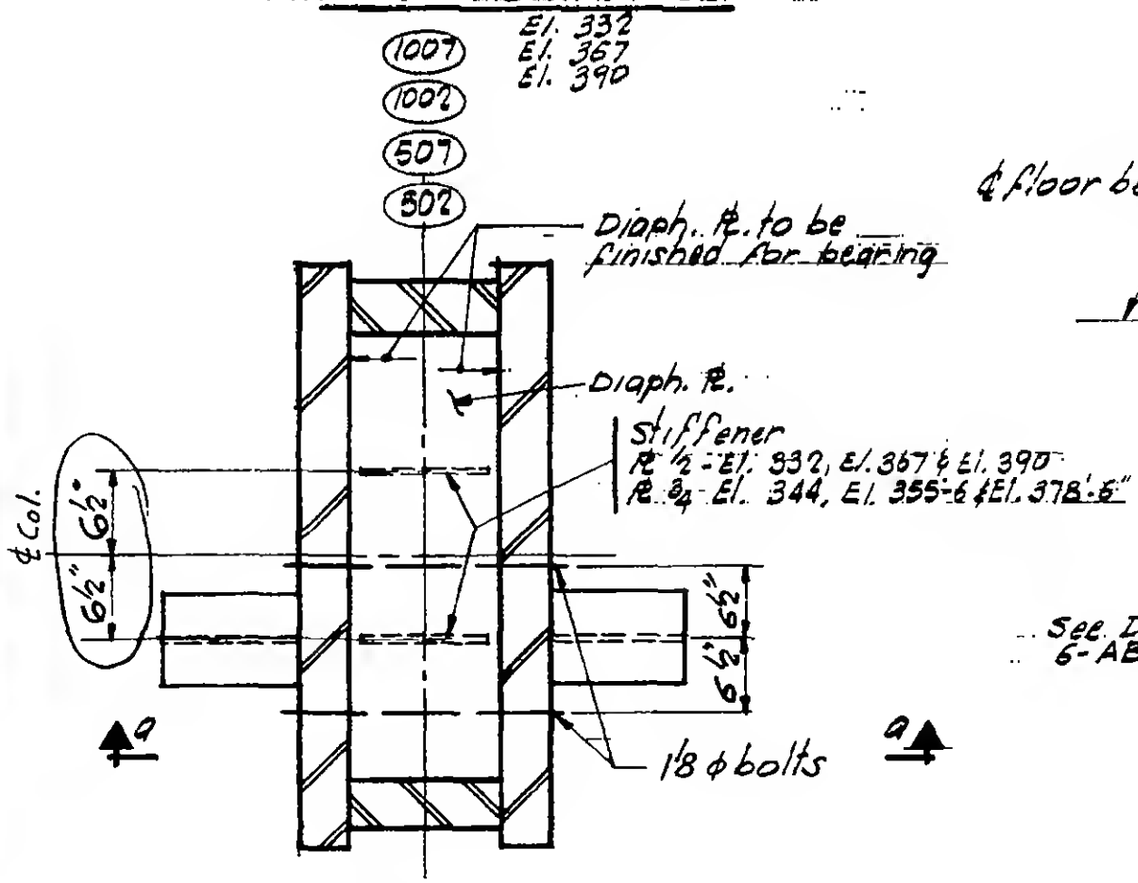

PLAN

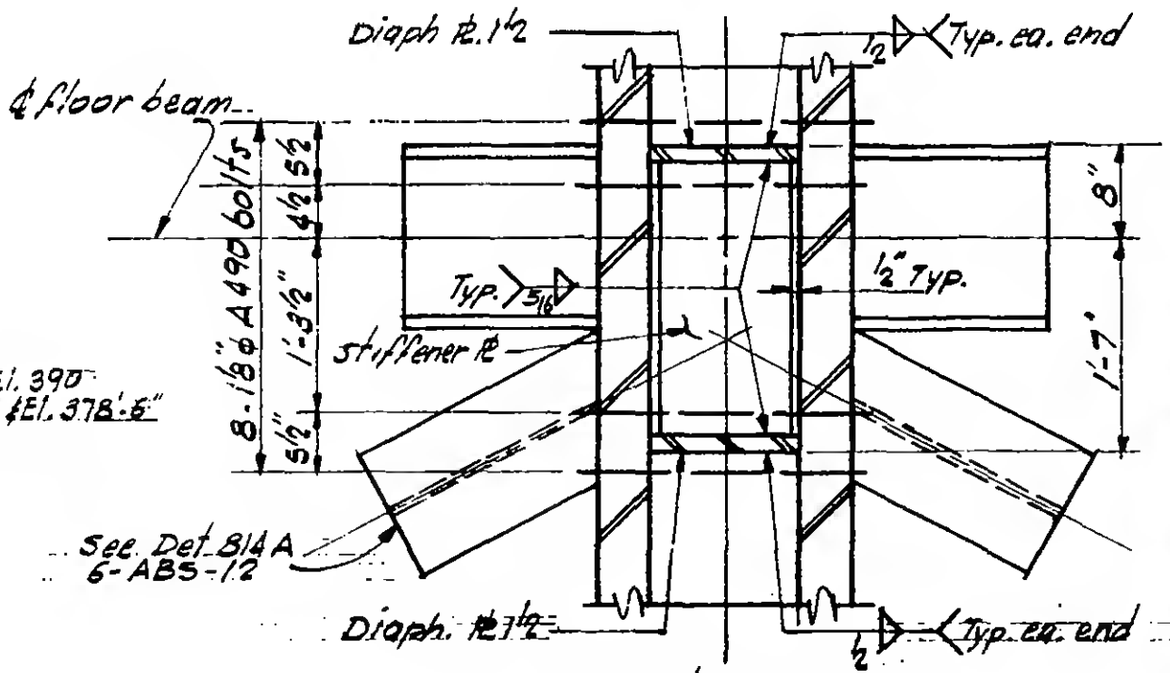

Section a-a
El. 344

LICENSED PROFESSIONAL ENGINEER LESLIE E. ROBERTSON No. 34360 UNIVERSITY OF THE STATE OF NEW YORK

6-AB5-88