SKILLING - HELLE - CHRISTIANSEN - ROBERTSON — Structural & Civil Engineers

PROJECT: THE WORLD TRADE CENTER | TITLE: COL. REINF. AT BRACING COL. 505 & 1004 | DATE: 8.14.67

REVISIONS
9-29-67

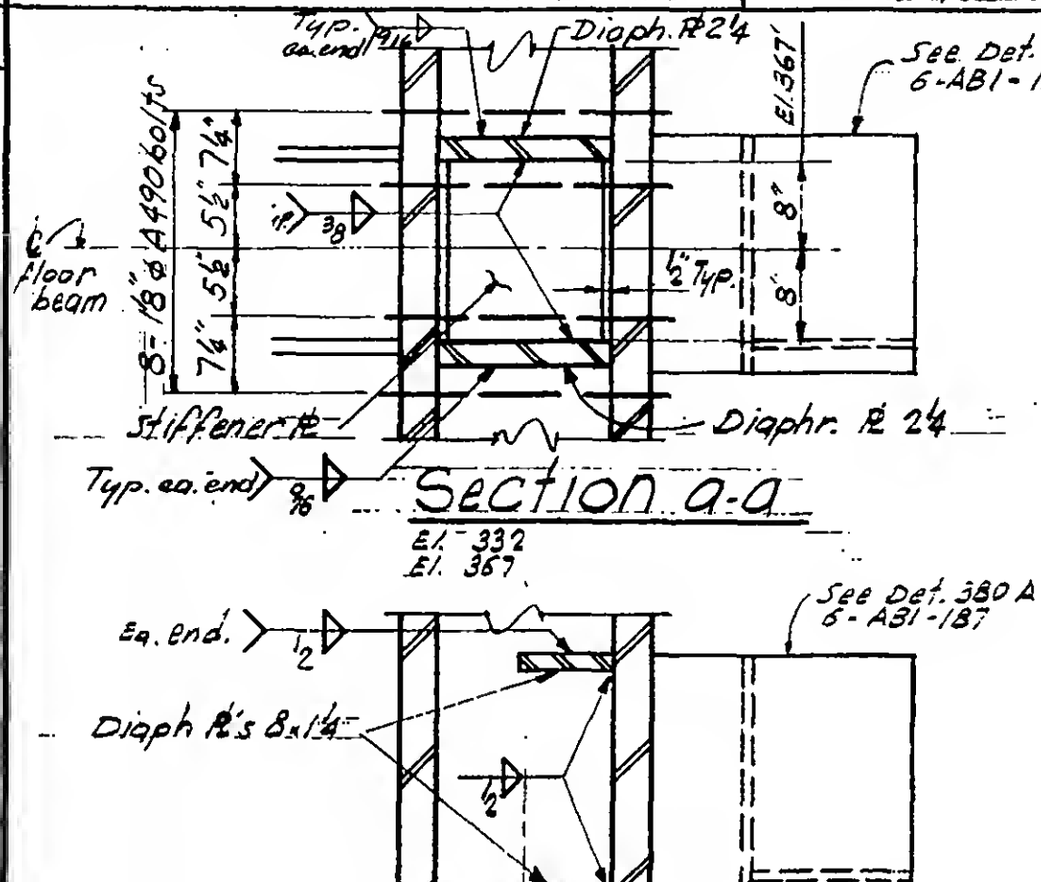

Section a-a
El. 332
El. 367

Section a-a
El. 390'

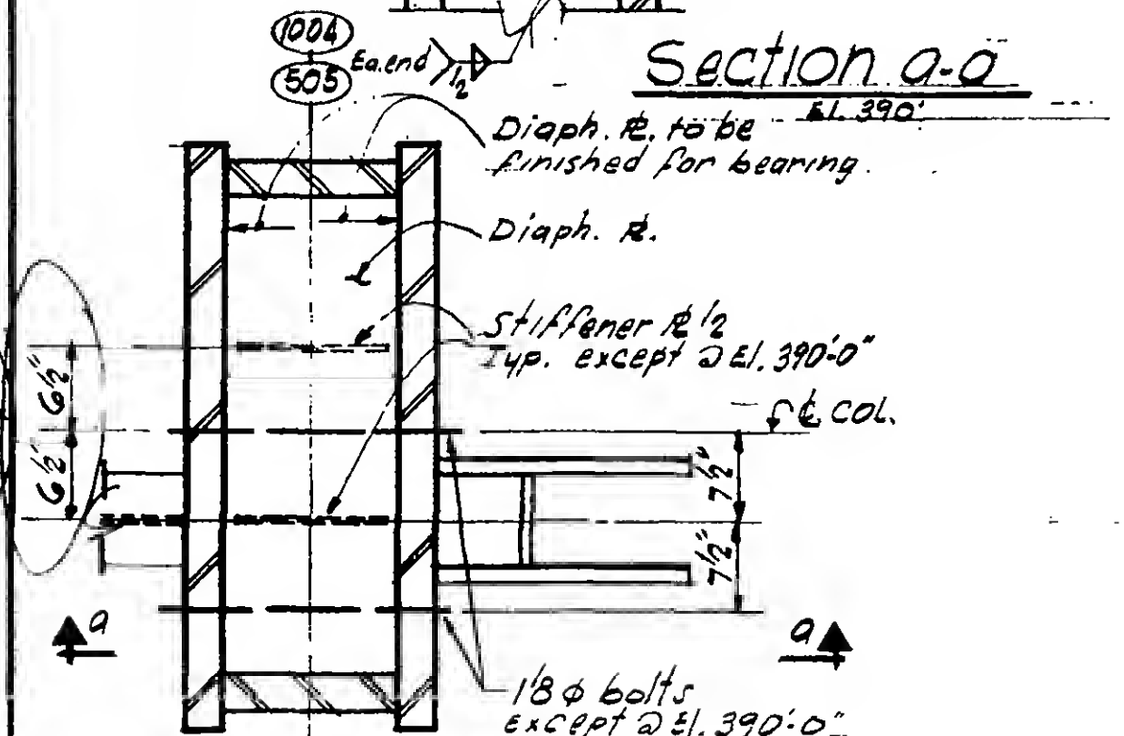

PLAN

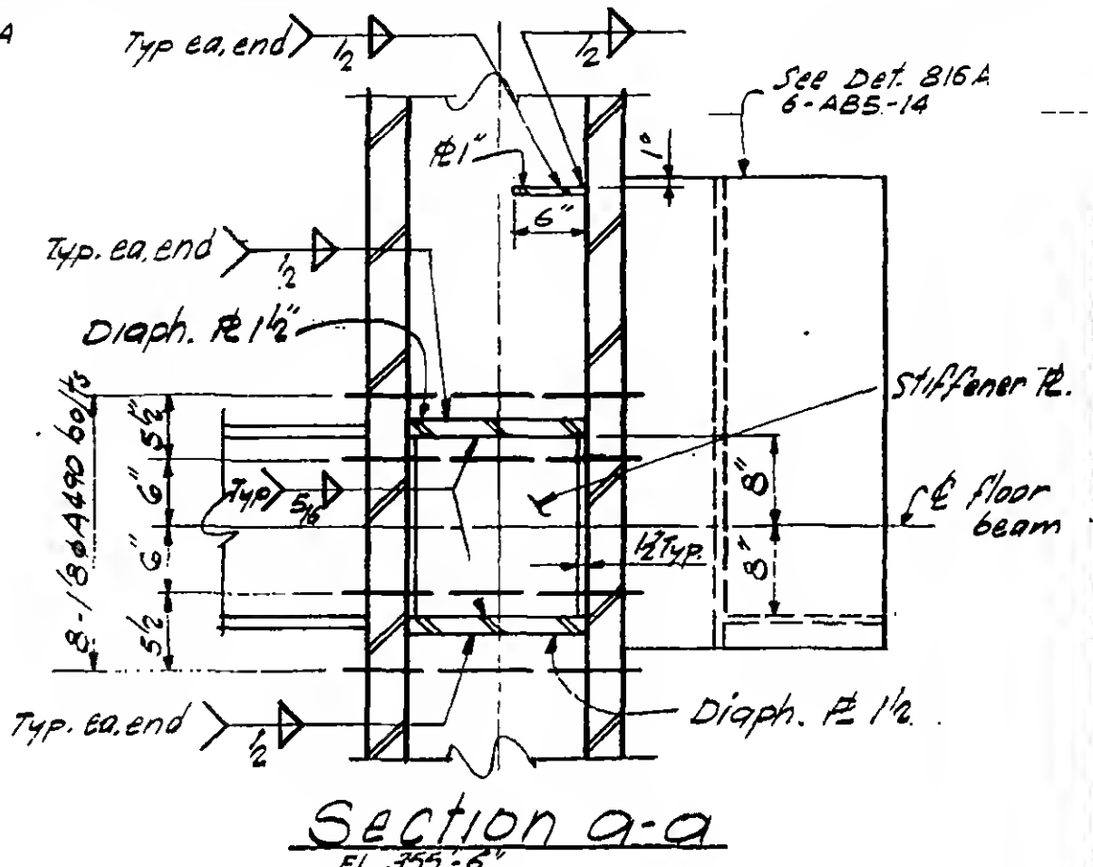

Section a-a
El. 355'-6"
El. 378'-6"

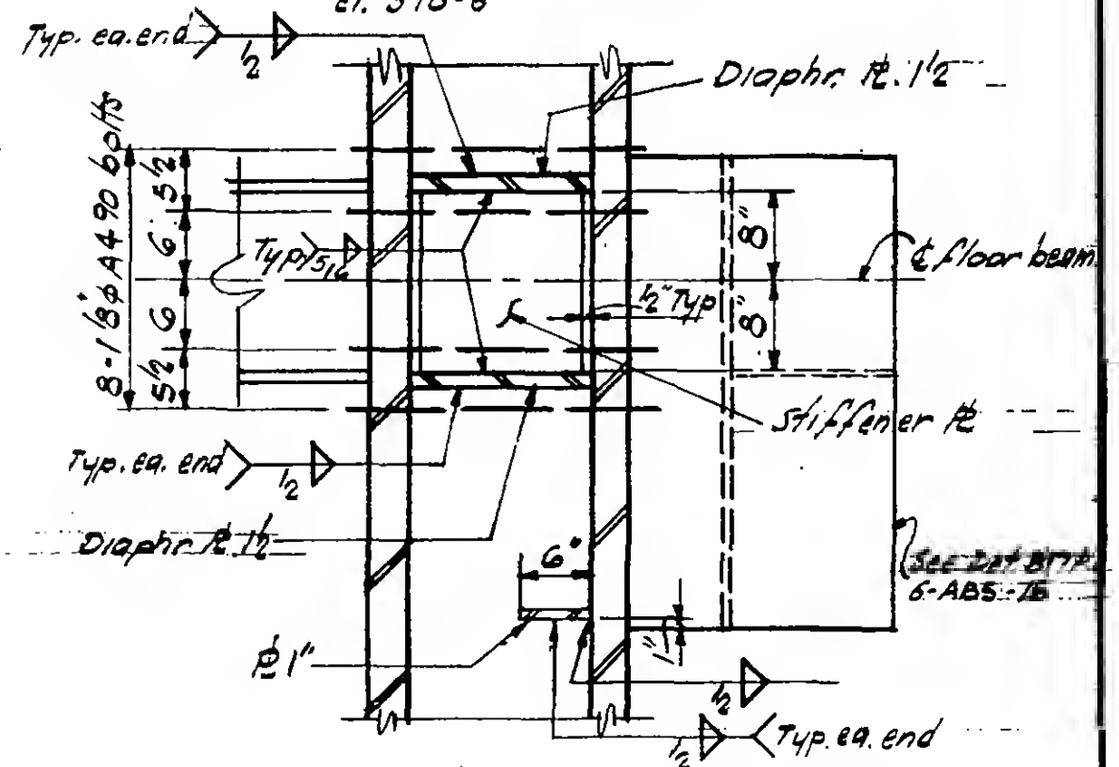

Section a-a
El. 344

6-AB5-90

LICENSED PROFESSIONAL ENGINEER
LESLIE E. ROBERTSON
No. 34360
LICENSED BY THE STATE OF NEW YORK