SKILLING - HELLE - CHRISTIANSEN - ROBERTSON — Structural & Civil Engineers

PROJECT THE WORLD TRADE CENTER | TITLE COL. REINF. AT BRACING COL. 506 | DATE 8-14-67

REVISIONS
9-29-67

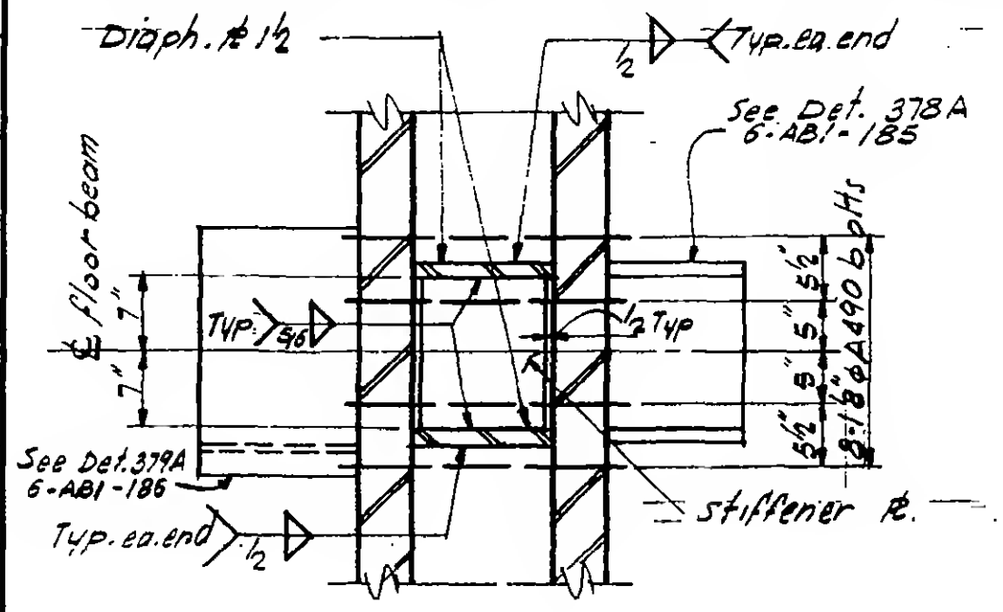

Section a-a

El. 344
El. 355'-6"
El. 378'-6"

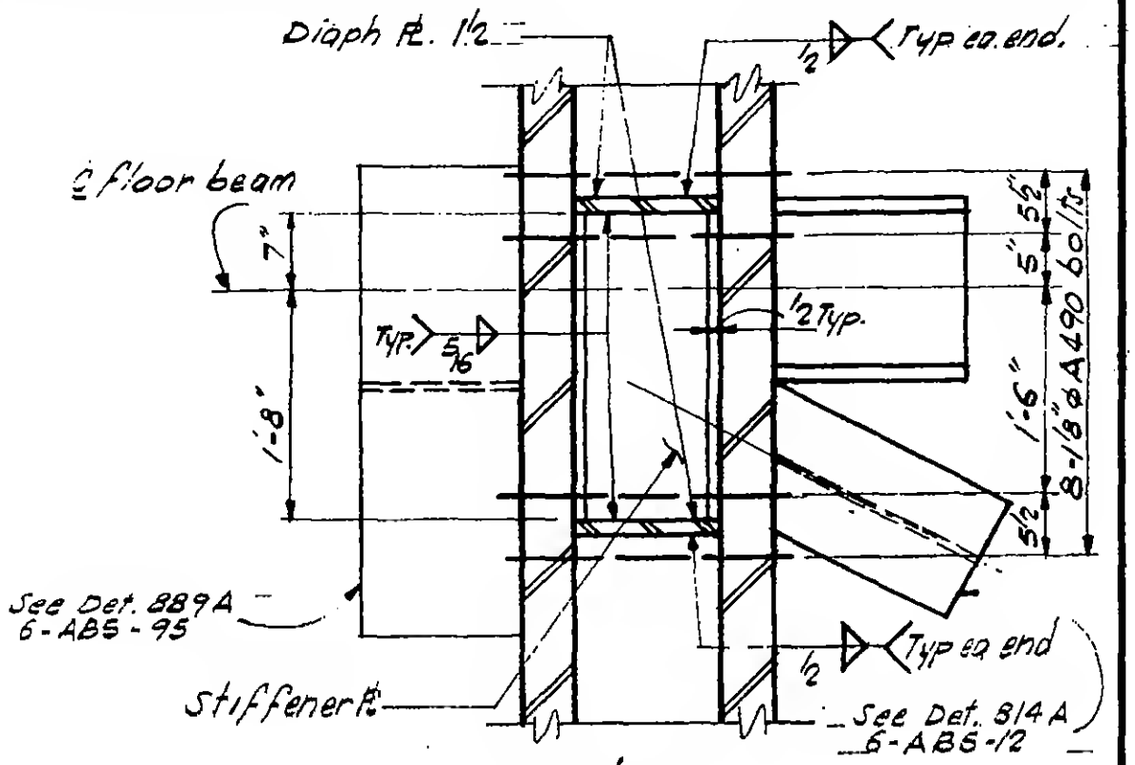

Section a-a

El. 367
El. 390

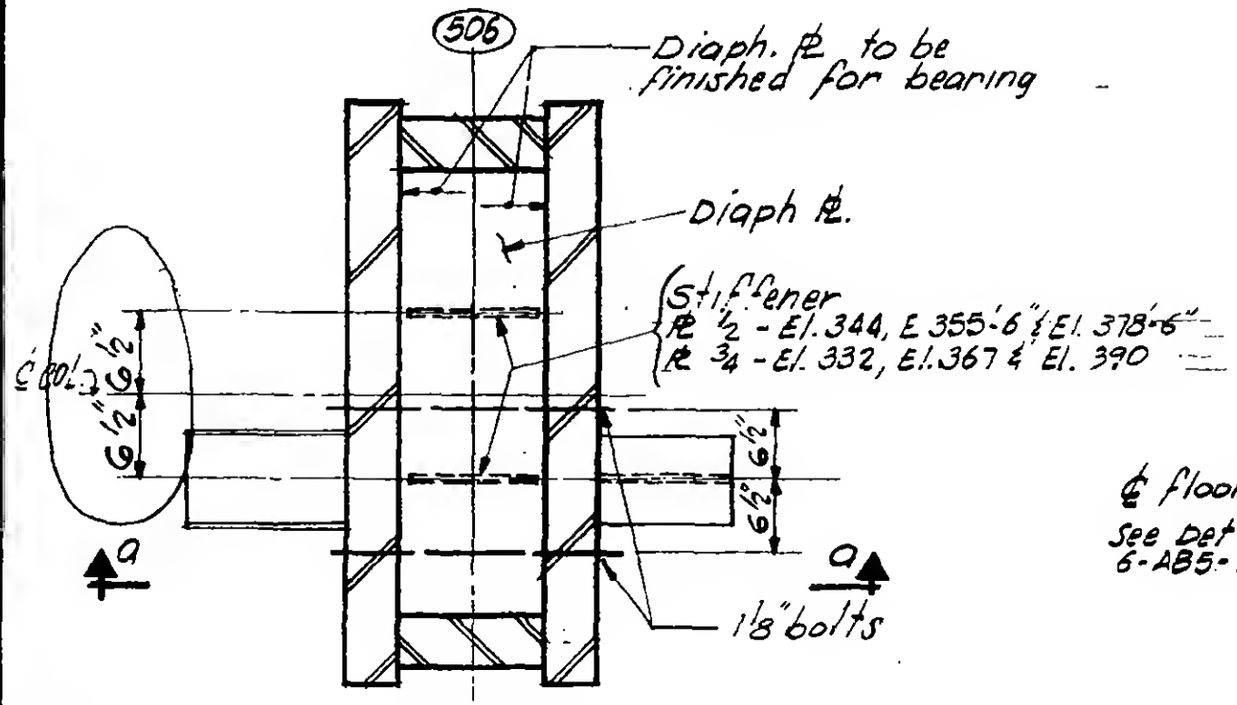

PLAN

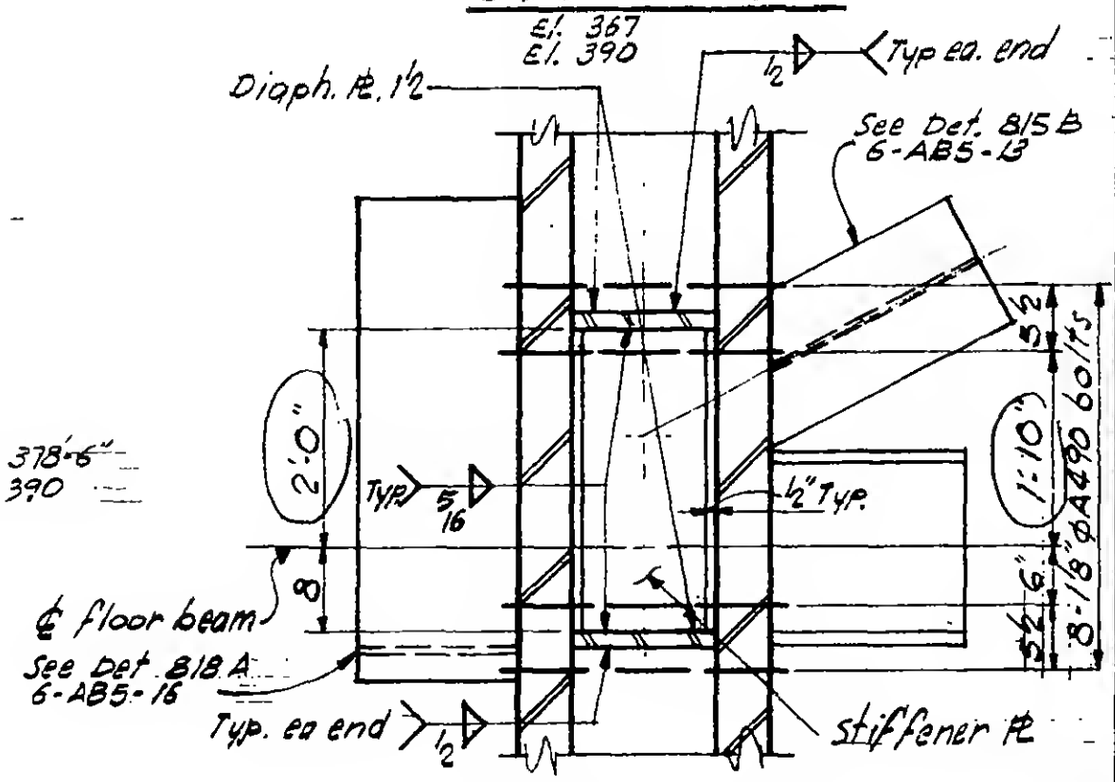

Section a-a

El. 332

6-AB5-91

LICENSED PROFESSIONAL ENG'NEER
LESLIE E. ROBERTSON
No. 34360
UNIVERSITY OF THE STATE OF NEW YORK