SKILLING - HELLE - CHRISTIANSEN - ROBERTSON — Structural & Civil Engineers

PROJECT THE WORLD TRADE CENTER | TITLE COLUMN REINFORCING AT BRACING. COL. 1003 | DATE 8-14-67

REVISIONS

9-29-67

(1003)

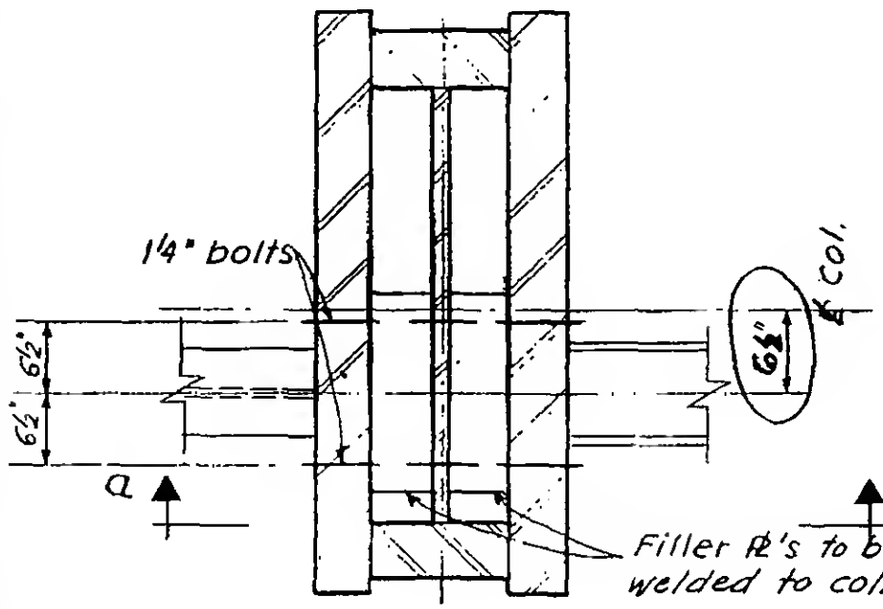

Plan

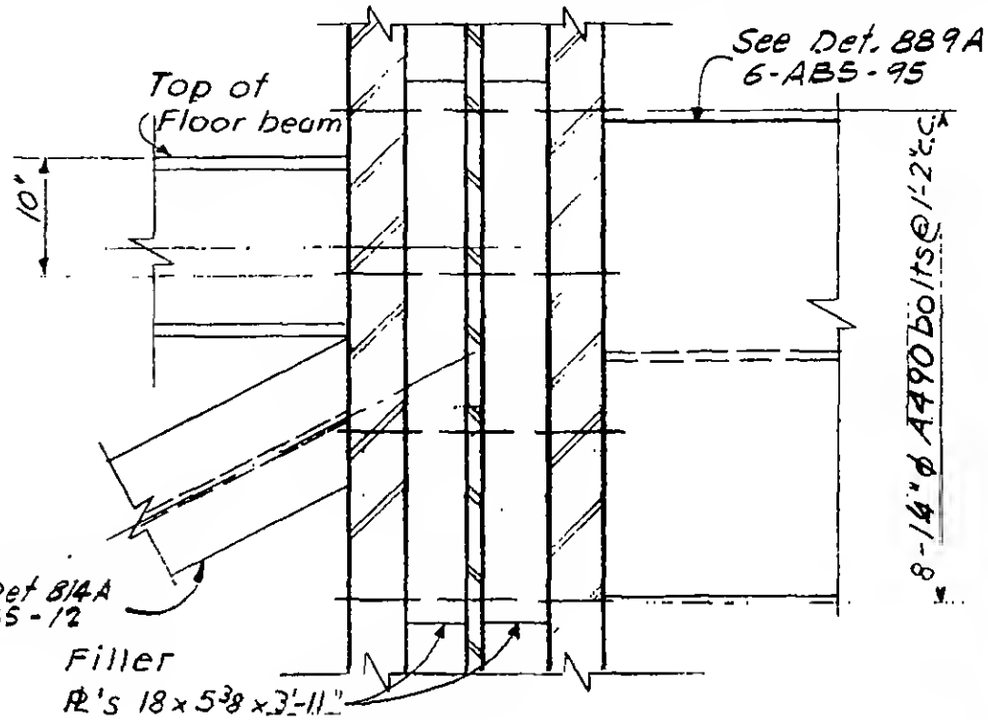

Section a-a

El. 367'-0"

El. 390'-0"

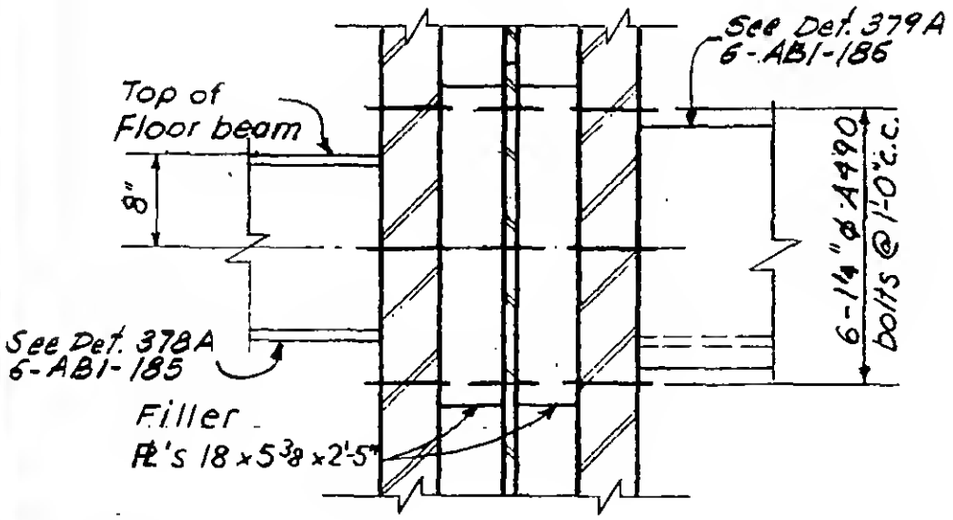

Section a-a

El. 344'-0"

El. 355'-6"

El. 378'-6"

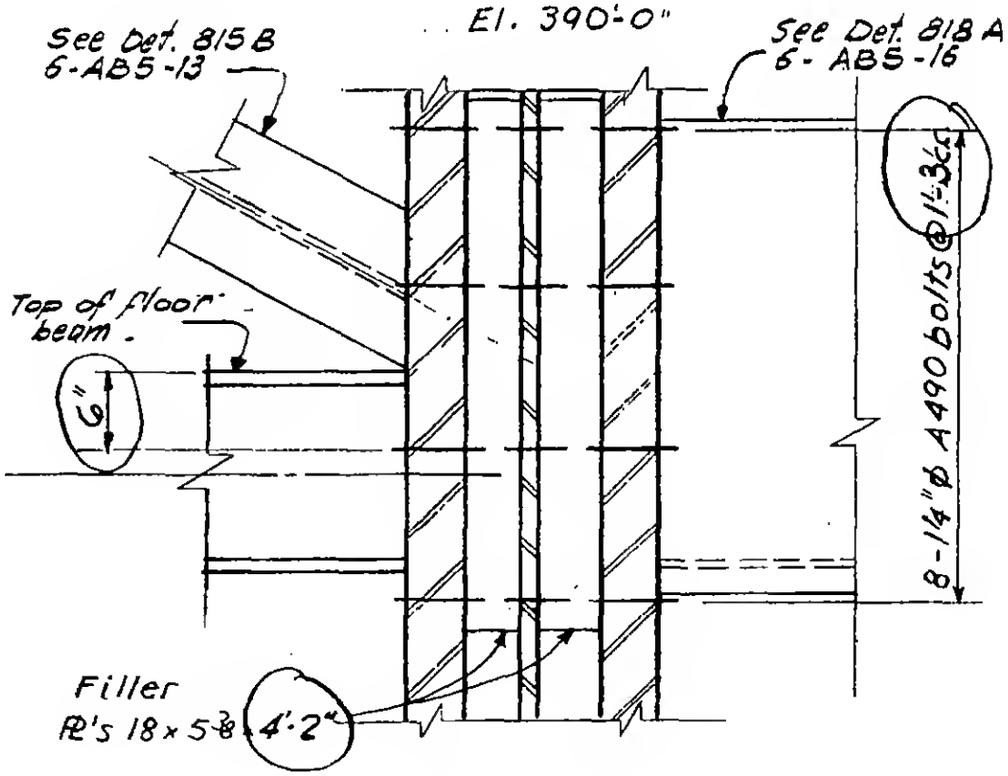

Section a-a

El. 332'-0

6-AB5-92

LICENSED PROFESSIONAL ENGINEER LESLIE E. ROBERTSON No. 34360 UNIVERSITY OF THE STATE OF NEW YORK