SKILLING - HELLE - CHRISTIANSEN - ROBERTSON Structural & Civil Engineers

PROJECT THE WORLD TRADE CENTER | TITLE TEMPORARY BRACING DETAILS A, B & C | DATE 2-9-68

REVISIONS

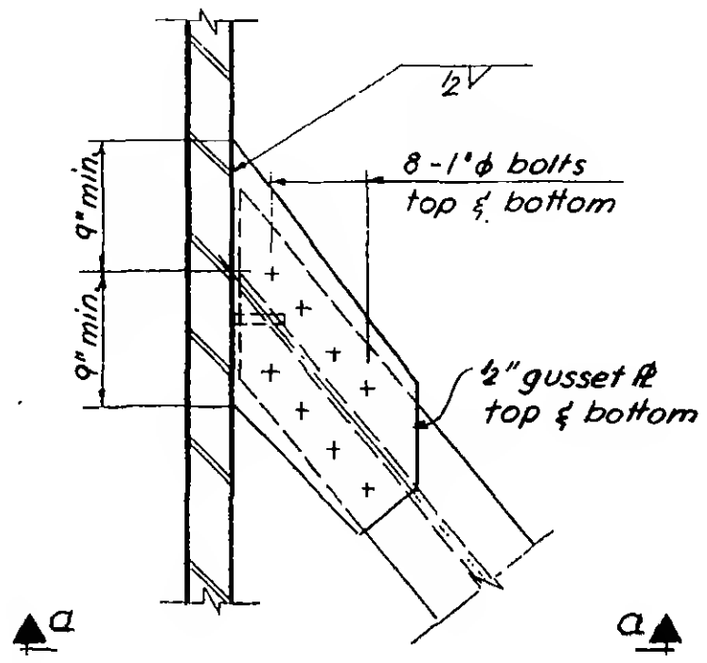

Plan

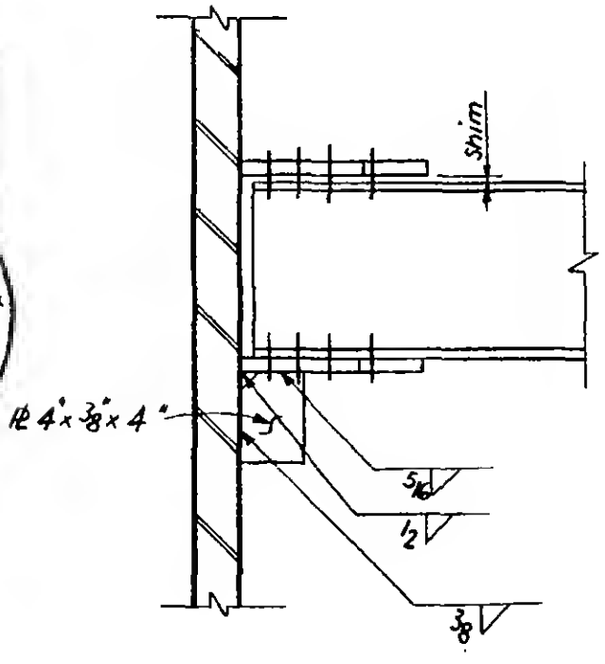

Section a-a

Detail A

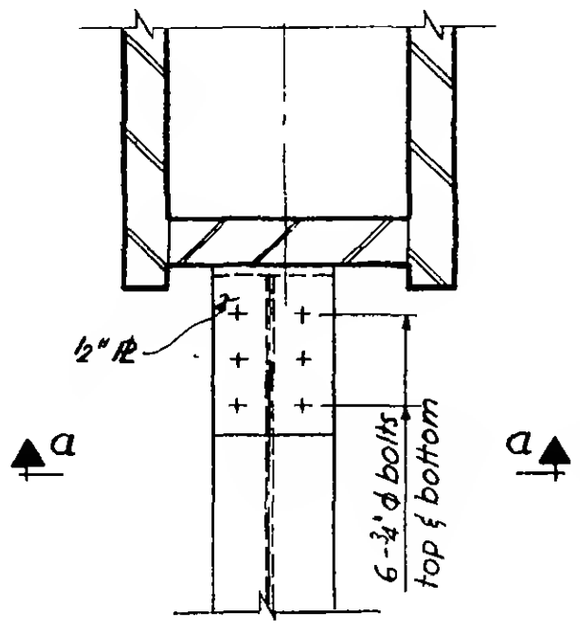

Plan

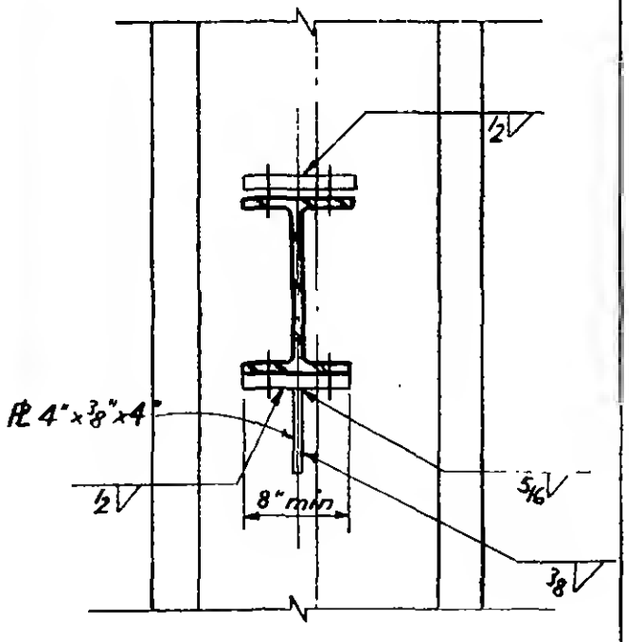

Section a-a

Detail B

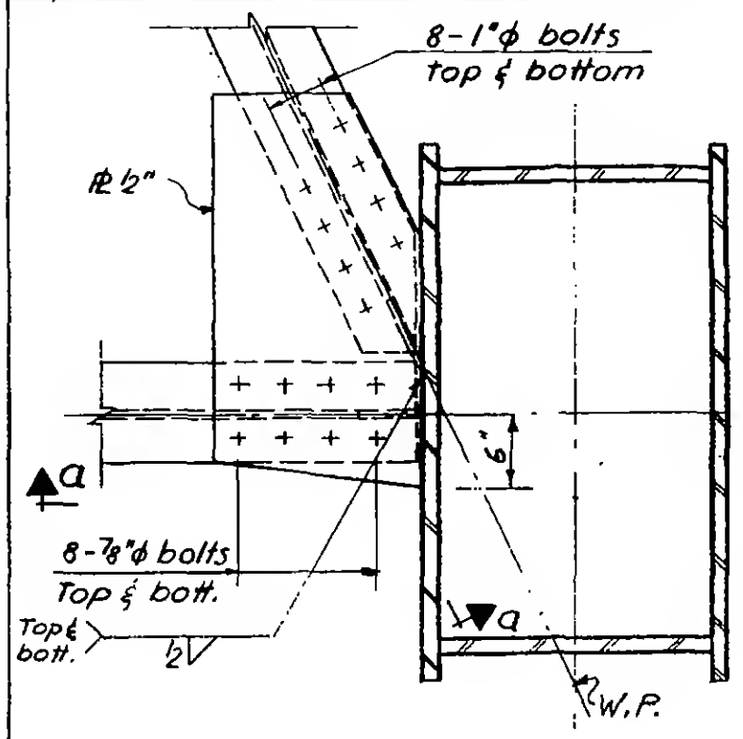

Plan

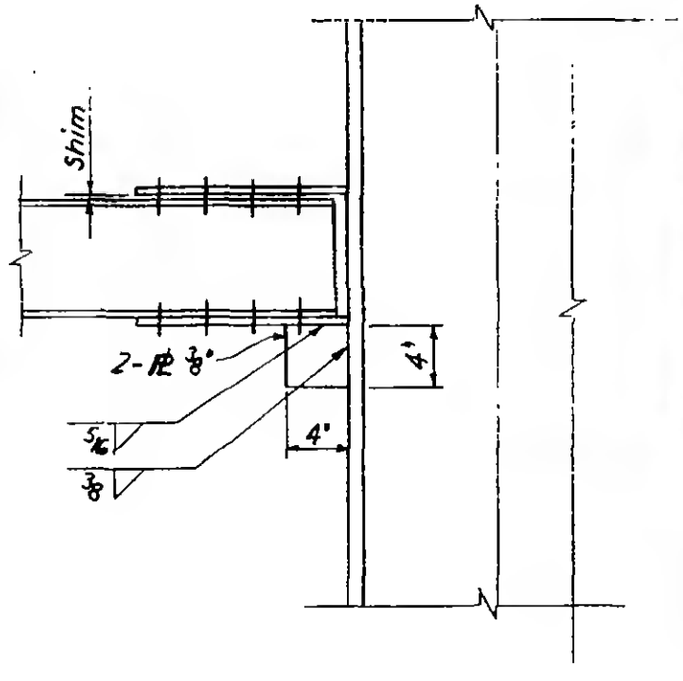

Section a-a

Detail C

REGISTERED PROFESSIONAL ENGINEER
LESLIE E. ROBERTSON
No. 34360
UNIVERSITY OF THE STATE OF NEW YORK

G-BS-109