SKILLING - HELLE - CHRISTIANSEN - ROBERTSON Structural & Civil Engineers

PROJECT THE WORLD TRADE CENTER | TITLE TEMPORARY BRACING DETAILS D,E&F | DATE 2-9-68

REVISIONS

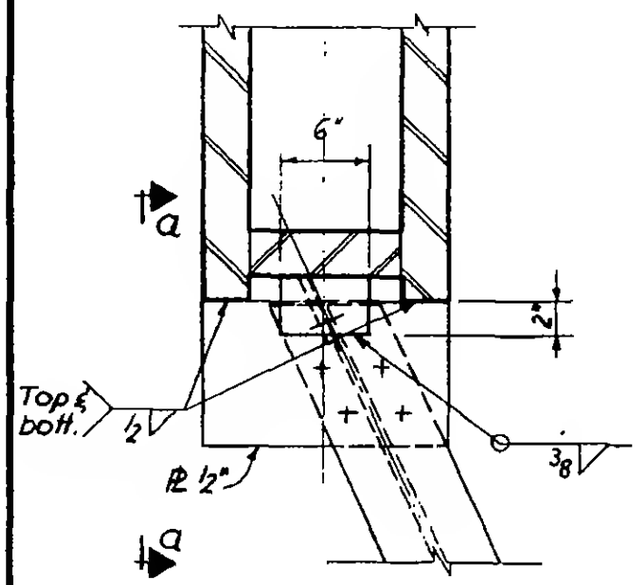

Plan

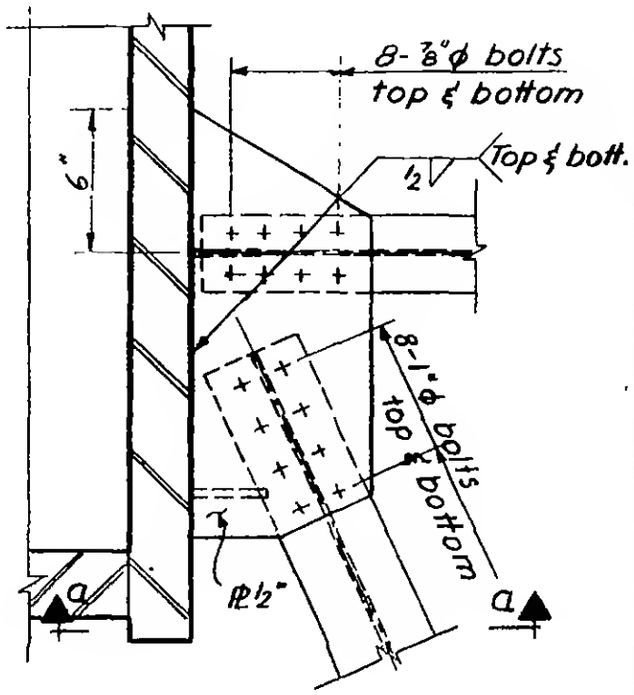

Plan

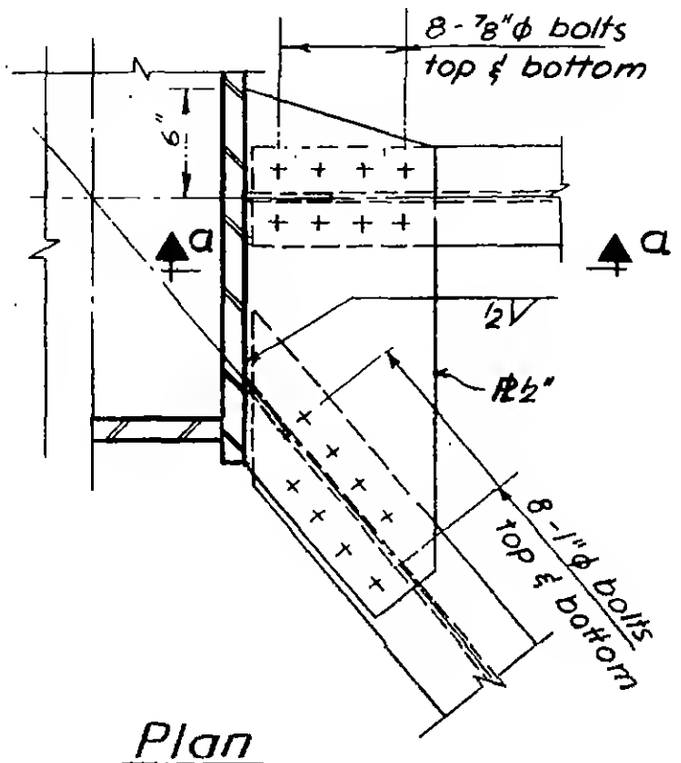

Plan

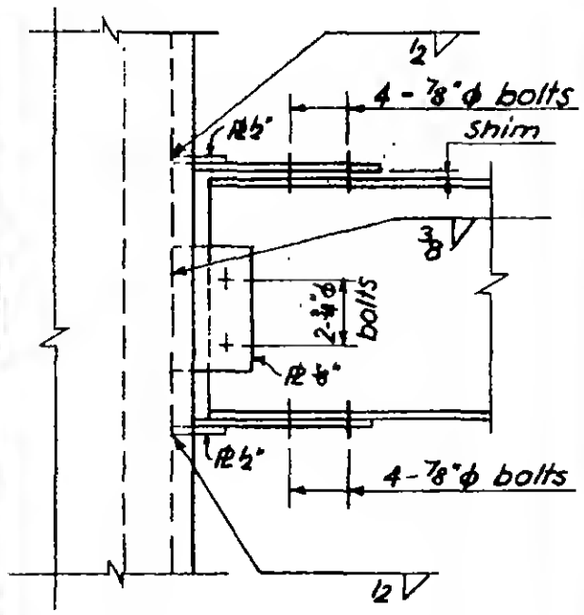

Section a-a

Detail D

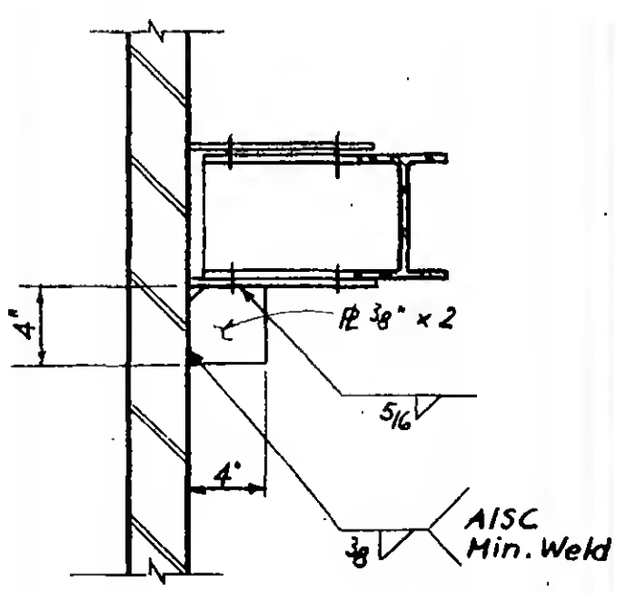

Section a-a

Detail E

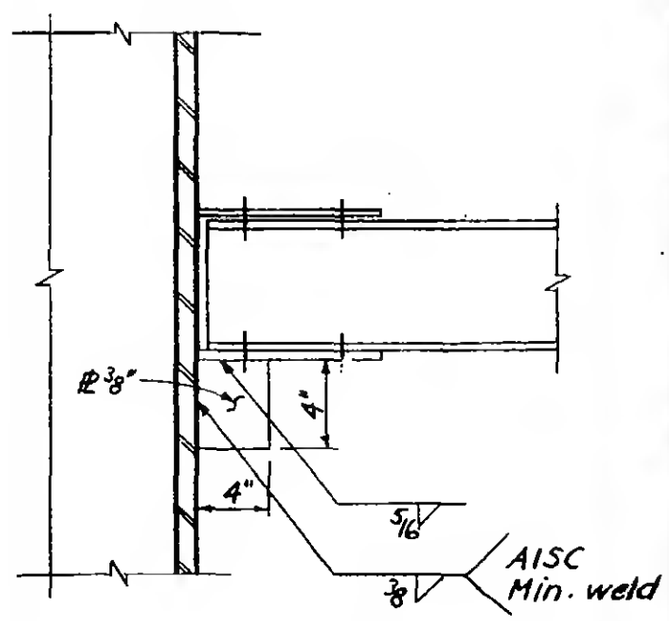

Section a-a

Detail F

6-B5-110

PROFESSIONAL ENGINEER LOUIS E. ROBERTSON No. 34350 STATE OF NEW YORK