SKILLING - HELLE - CHRISTIANSEN - ROBERTSON Structural & Civil Engineers

PROJECT THE WORLD TRADE CENTER | TITLE TEMPORARY BRACING DETAILS 6, H, J | DATE 2-9-68

REVISIONS

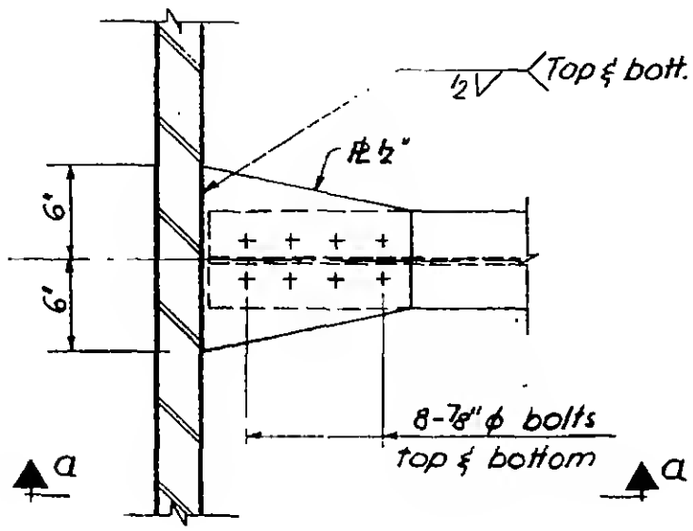

Plan

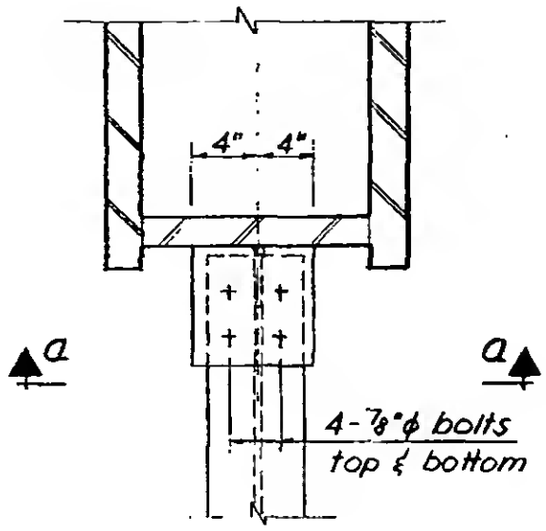

Plan

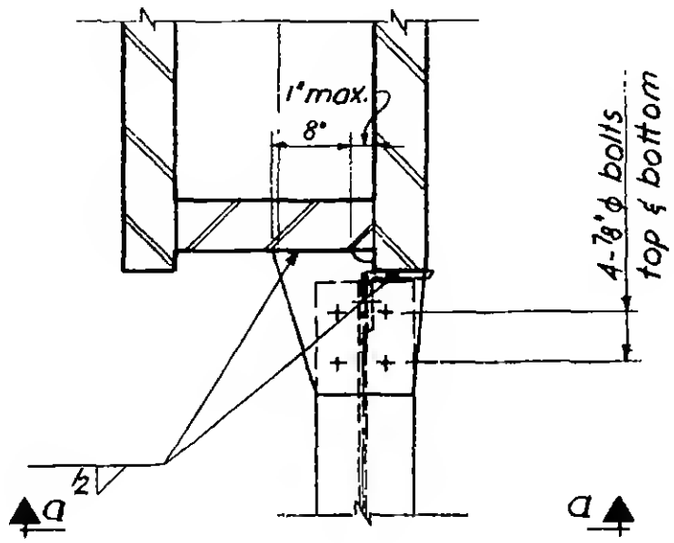

Plan

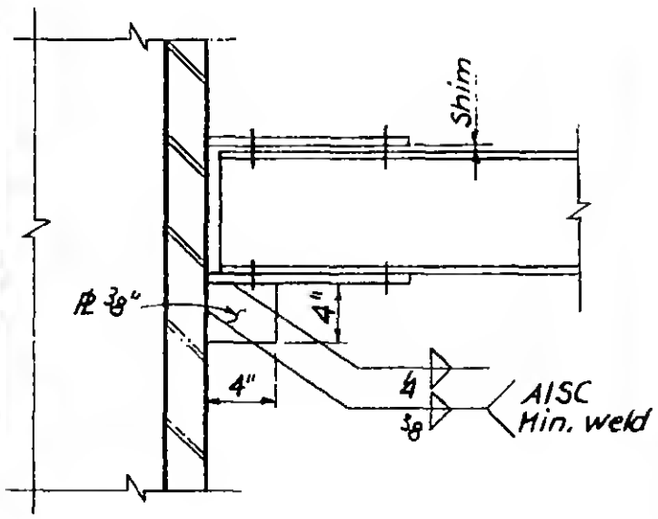

Section a-a

Detail 6

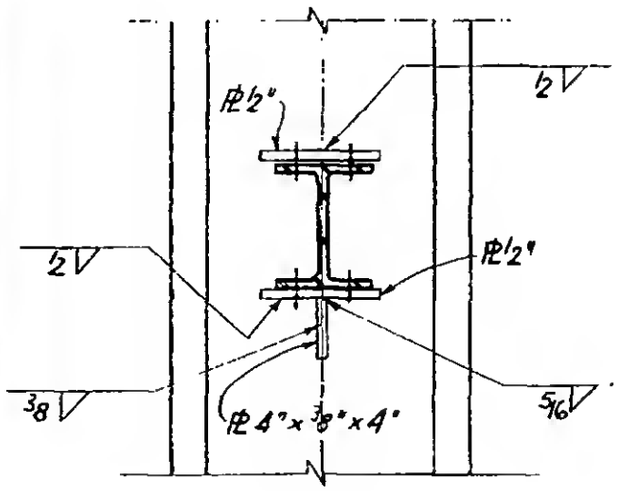

Section a-a

Detail H

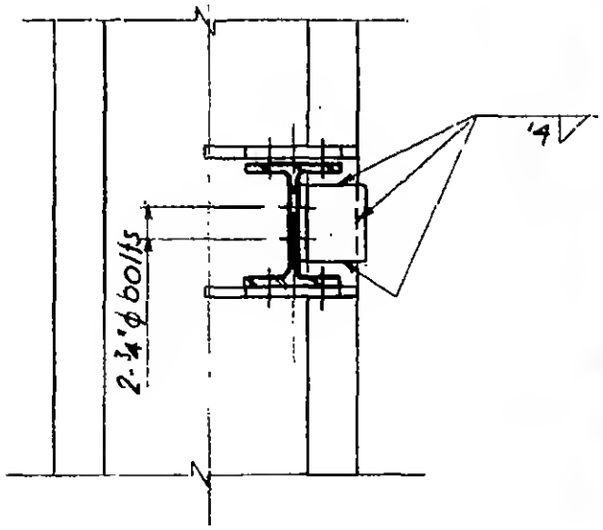

Section a-a

Detail J

LICENSED PROFESSIONAL ENGINEER
LESLIE E. ROBERTSON
NO. 34350
UNIVERSITY OF THE STATE OF NEW YORK

6-B5-111