SKILLING - HELLE - CHRISTIANSEN - ROBERTSON Structural & Civil Engineers

PROJECT THE WORLD TRADE CENTER | TITLE TRUSS SEAT DETAIL 12 | DATE 9-6-67

REVISIONS
11-22-67

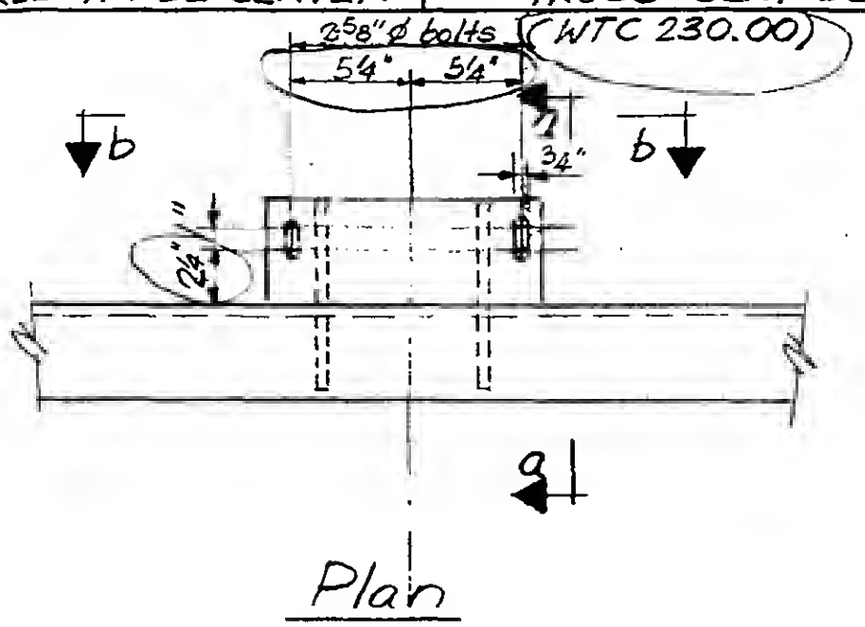

Plan

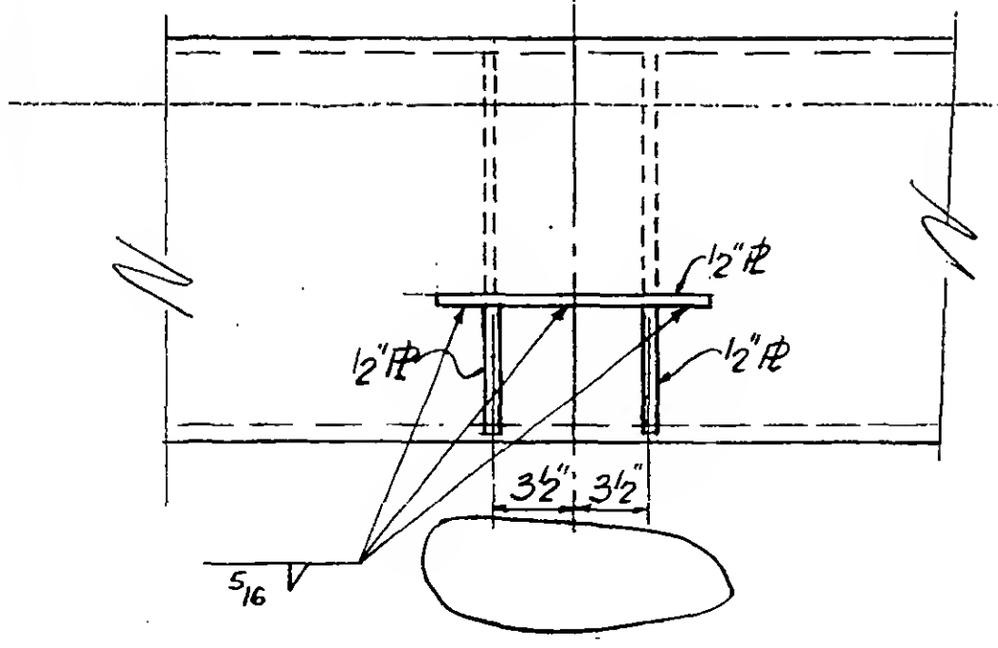

Section b-b

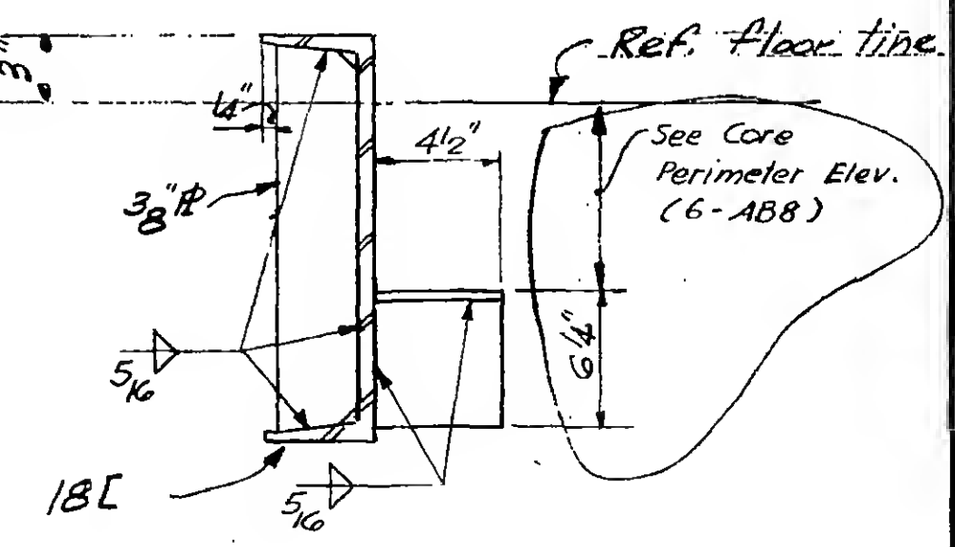

Section a-a

LICENSED PROFESSIONAL ENGINEER
LESLIE E. ROBERTSON
No. 34360
UNIVERSITY OF THE STATE OF NEW YORK

R

6-AB8-10