SKILLING - HELLE - CHRISTIANSEN - ROBERTSON Structural & Civil Engineers

PROJECT THE WORLD TRADE CENTER | TITLE TRUSS SEAT DETAIL 14 | DATE 9-6-67

EVISIONS

11-22-67

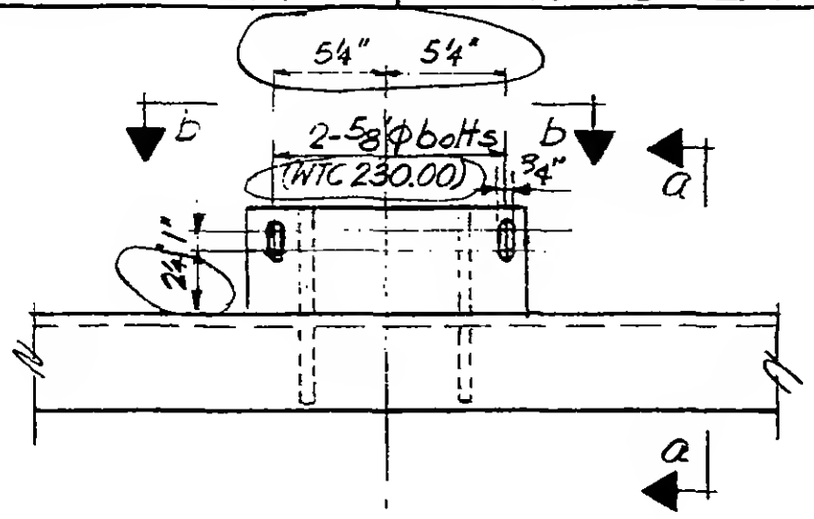

Plan

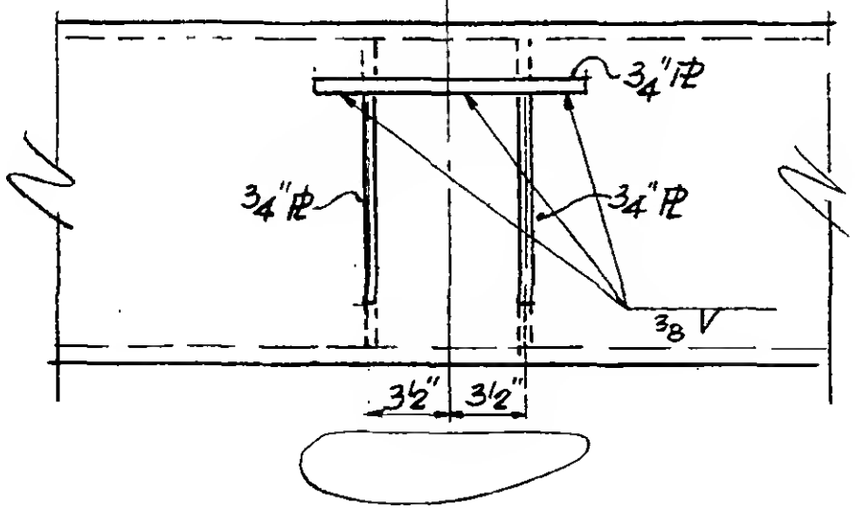

Section b-b

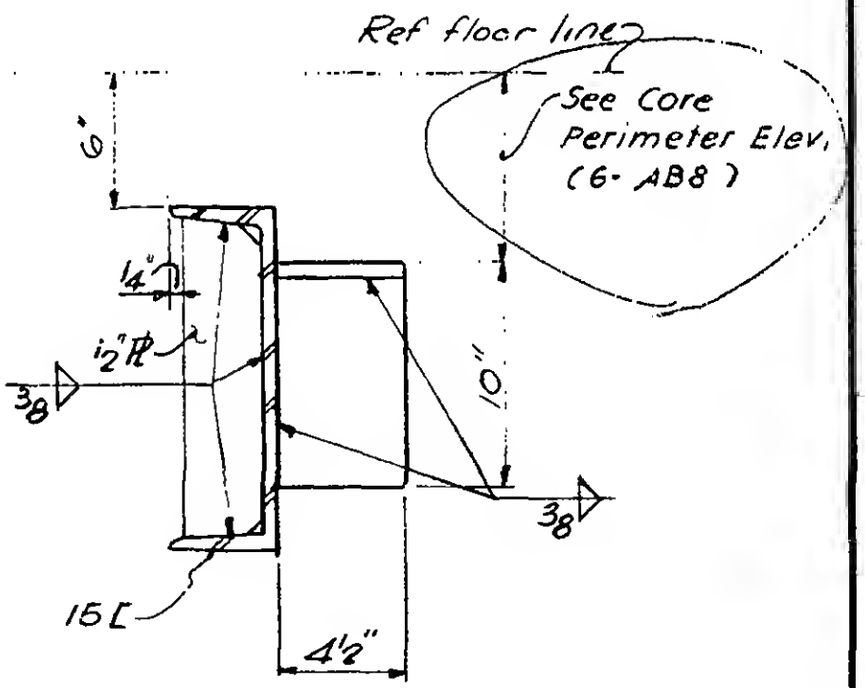

Section a-a

6-AB8-12