SKILLING - HELLE - CHRISTIANSEN - ROBERTSON Structural & Civil Engineers

PROJECT THE WORLD TRADE CENTER | TITLE TRUSS SEAT DETAIL 16 | DATE 9-6-67

REVISIONS
11-22-67

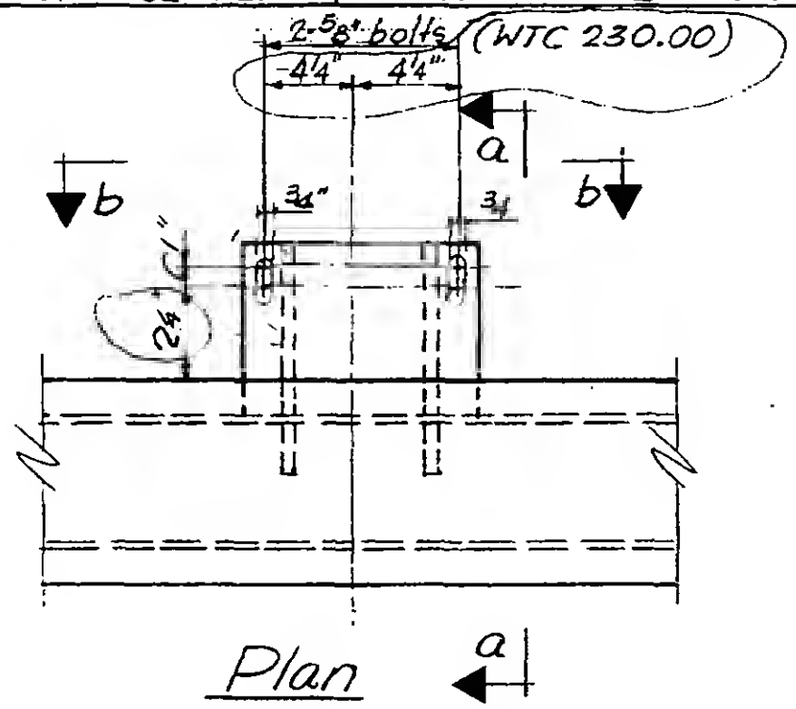

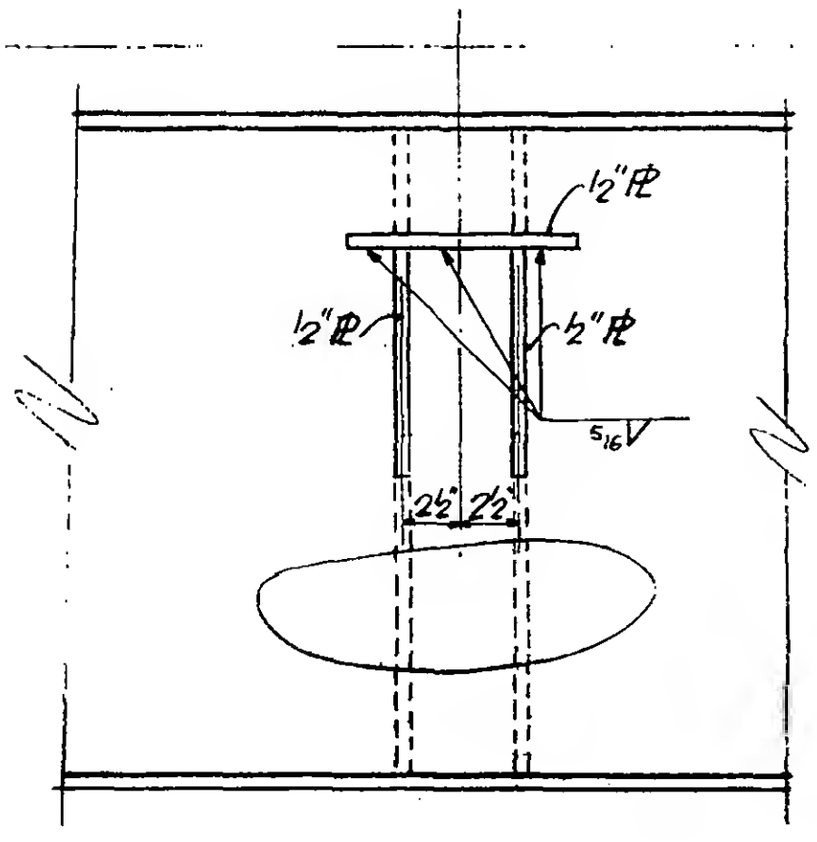

Section b-b

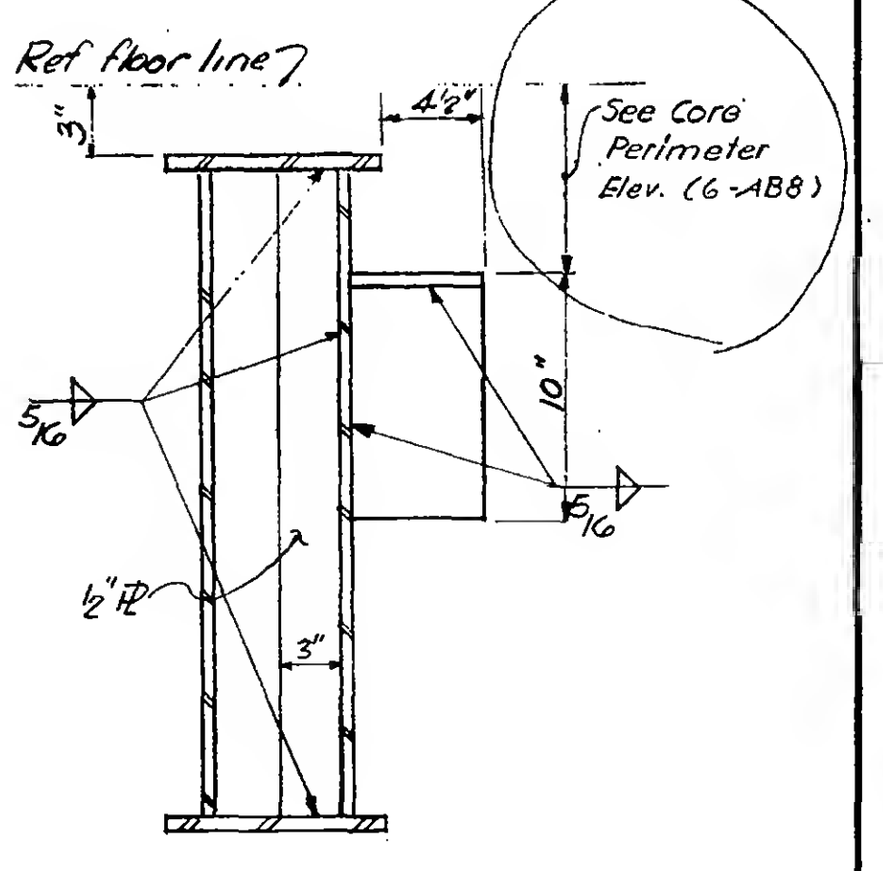

Section a-a

LICENSED PROFESSIONAL ENG'R
LESLIE E. ROBERTS, N
UNIVERSITY OF THE STATE OF N
NO. 34300

6-AB8-14