SKILLING - HELLE - CHRISTIANSEN - ROBERTSON Structural & Civil Engineers

PROJECT THE WORLD TRADE CENTER | TITLE CORE PERIMETER ELEVATION - FLOORS 45 | DATE 9-25-67

REVISIONS

11-22-67

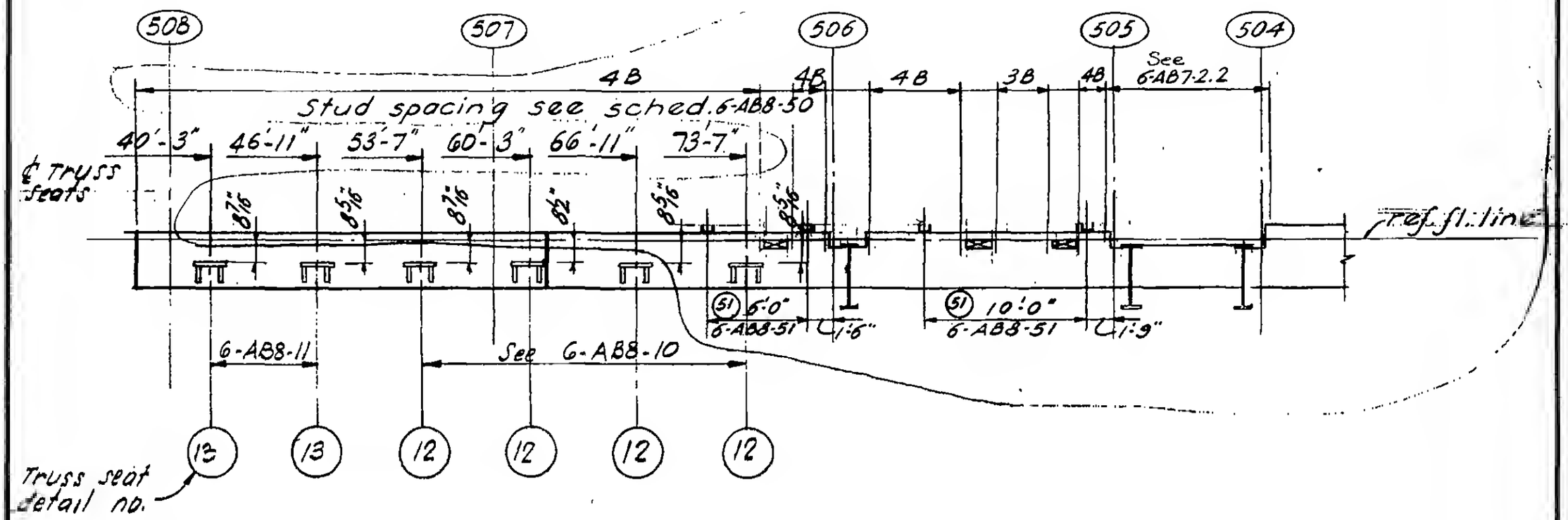

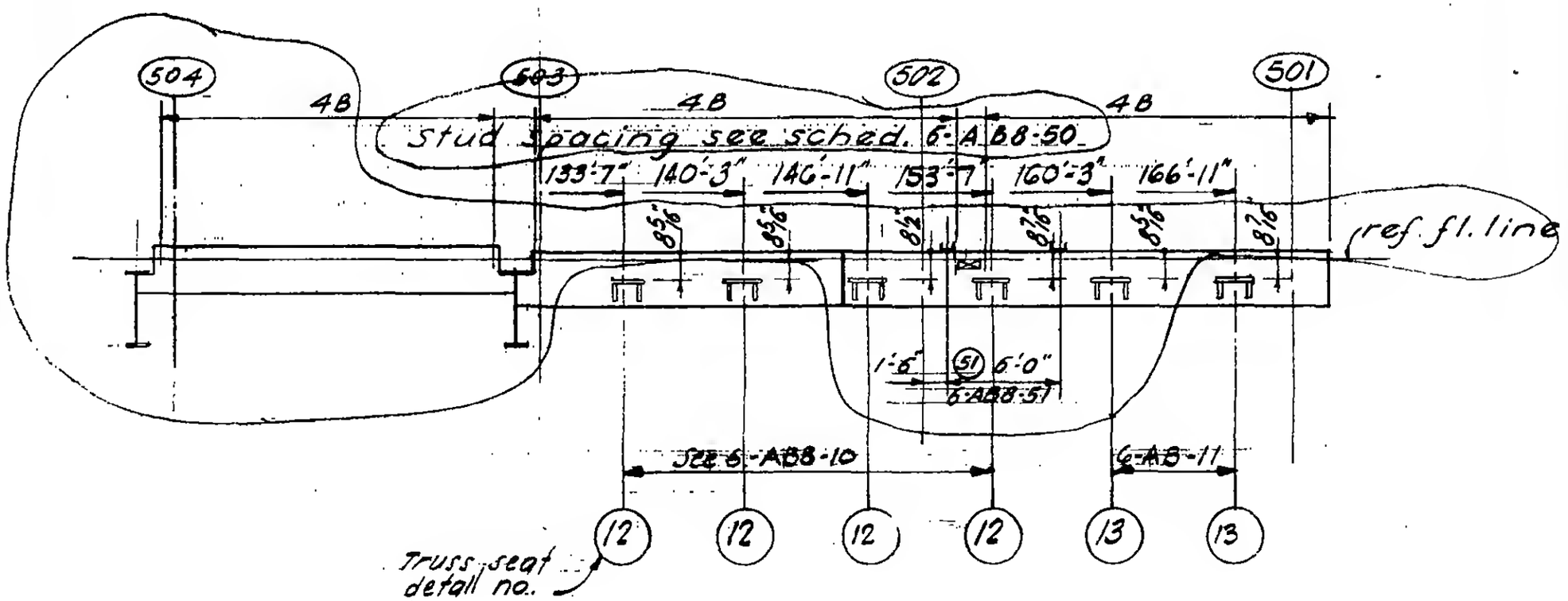

LICENSED PROFESSIONAL ENGINEER LESLIE E. ROBERTSON No. 34360 CITY OF NEW YORK STATE OF NEW YORK

6-AB8-17