SKILLING - HELLE - CHRISTIANSEN - ROBERTSON Structural & Civil Engineers

PROJECT THE WORLD TRADE CENTER | TITLE TRUSS SEAT DETAIL 26, 27 & 28 | DATE 11-22-67

REVISIONS

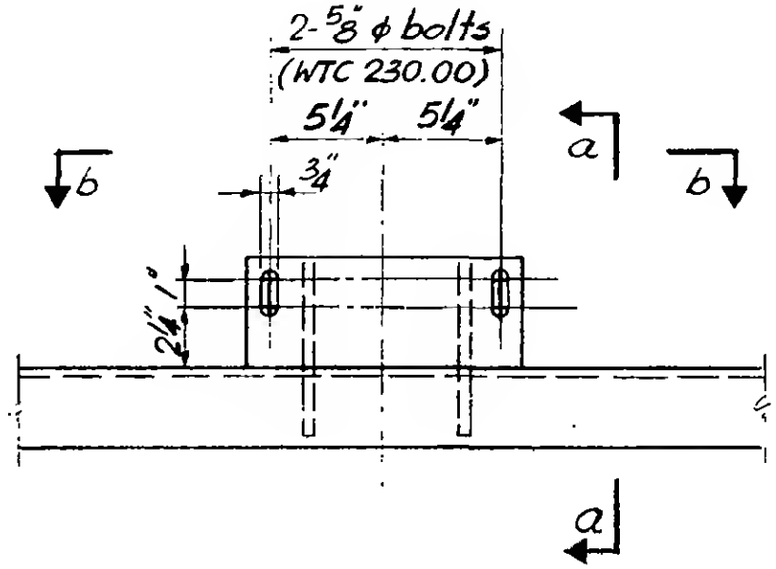

Plan

Detail	Plates		Welds	
	A	B	①	②
26	5/8"	1/2"	1/2	3/8
27	3/4"	5/8"	9/16	7/16
28	5/8"	5/8"	1/2	1/2

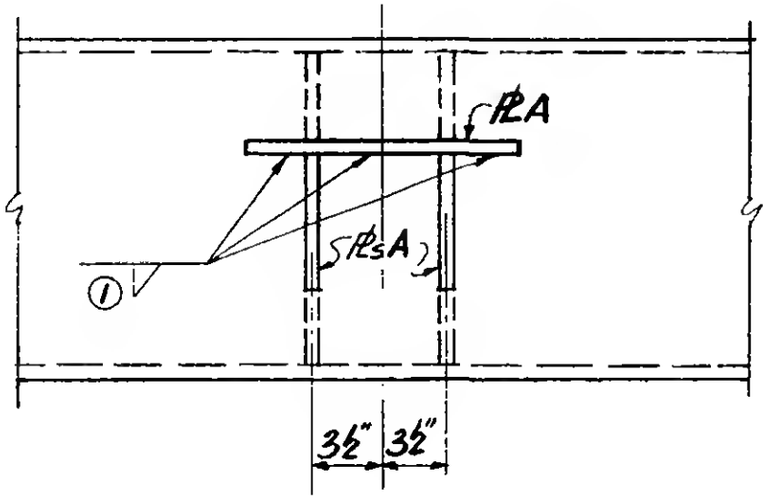

Section b-b

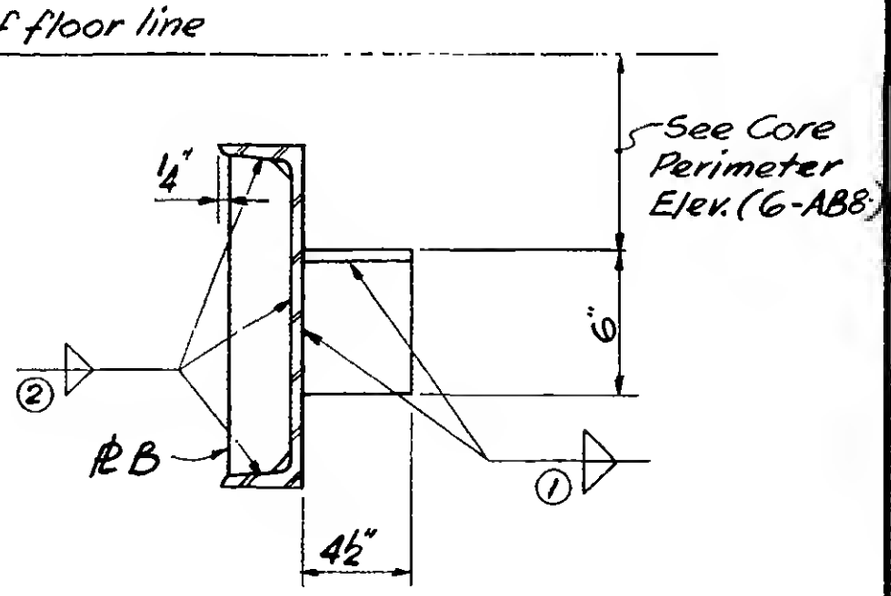

Section a-a

LICENSED PROFESSIONAL ENGINEER
LESLIE E. ROBERTSON
No. 34360
STATE OF NEW YORK

6-AB8-47