SKILLING - HELLE - CHRISTIANSEN - ROBERTSON Structural & Civil Engineers

PROJECT THE WORLD TRADE CENTER | TITLE TRUSS SEAT DETAILS 30, 31 & 32 | DATE 11-22-67

REVISIONS

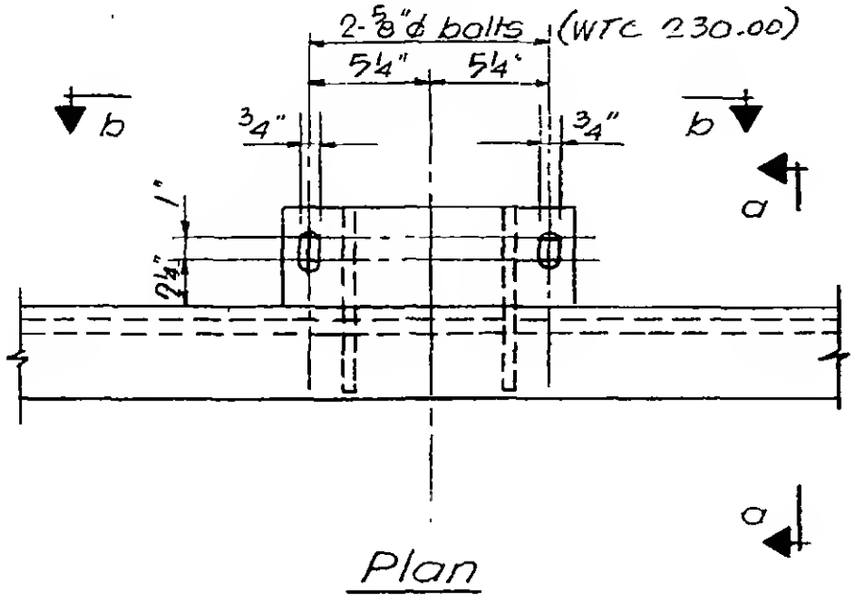

Plan

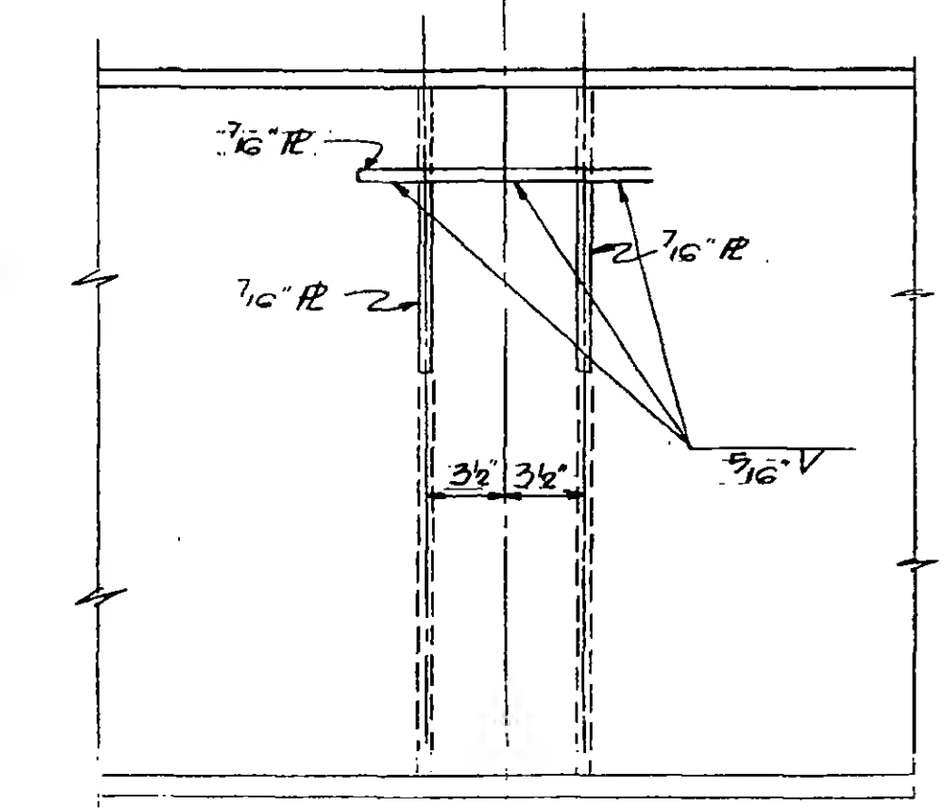

Section b-b

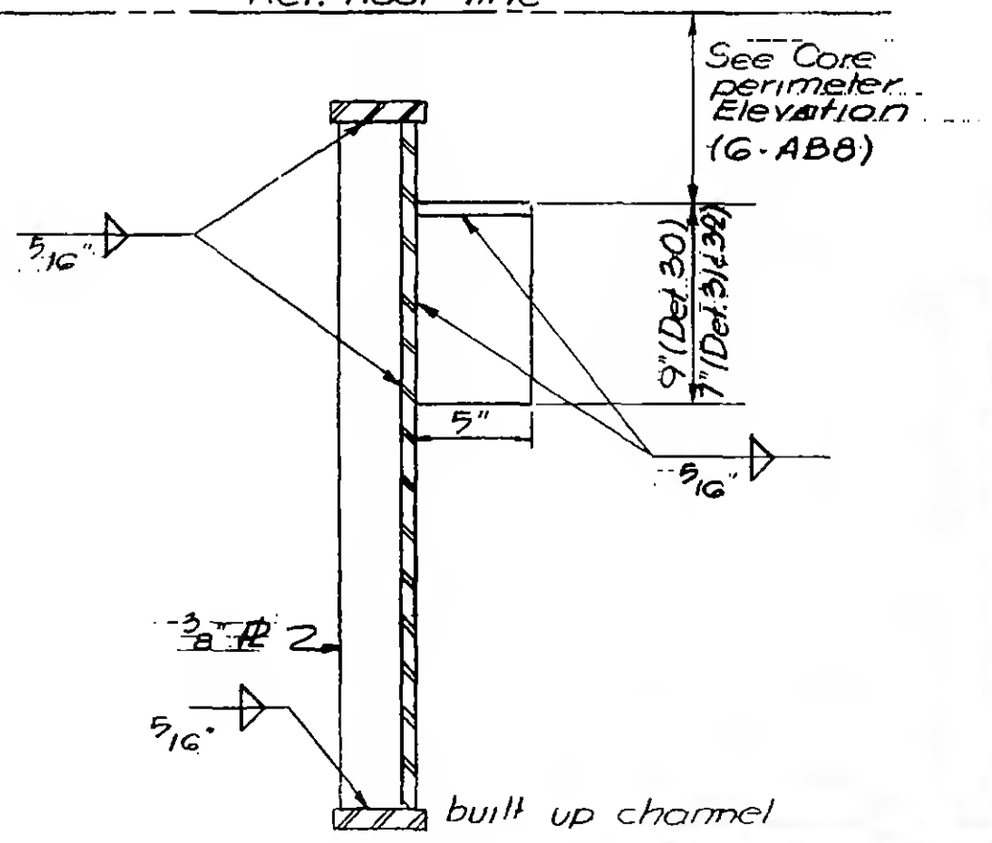

Section a-a

G-AB8-49