SKILLING - HELLE - CHRISTIANSEN - ROBERTSON  Structural & Civil Engineers

PROJECT THE WORLD TRADE CENTER | TITLE CORE PERIMETER DETAIL 51 | DATE 11-22-67

REVISIONS

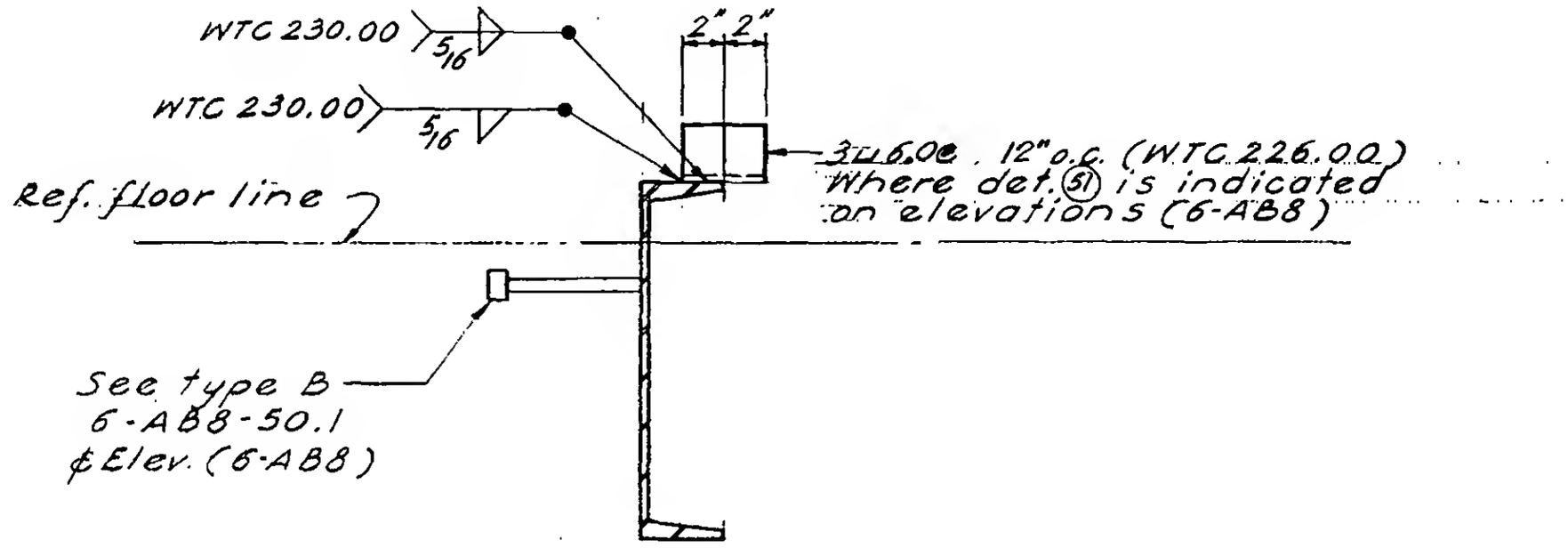





6-AB8-51