SKILLING - HELLE - CHRISTIANSEN - ROBERTSON Structural & Civil Engineers

PROJECT THE WORLD TRADE CENTER | TITLE TEMP. FRAMING FOR ELEVATOR #6 & 7 - DETAIL (D) | DATE 12-15-67

REVISIONS

1-12-68

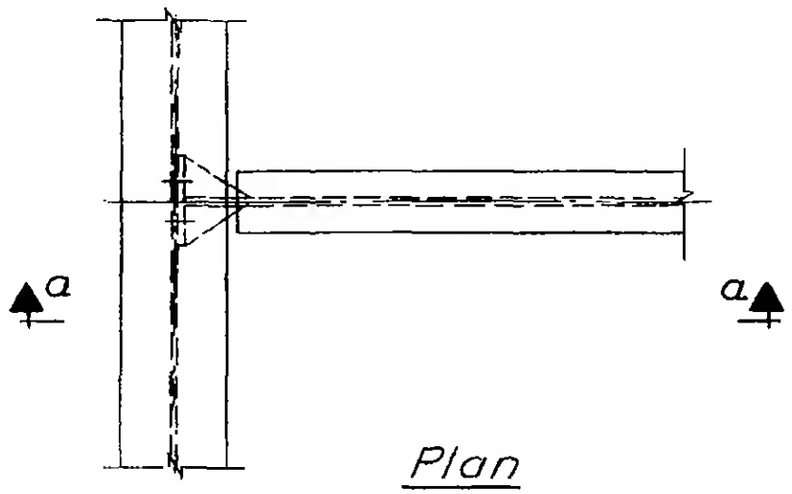

Plan

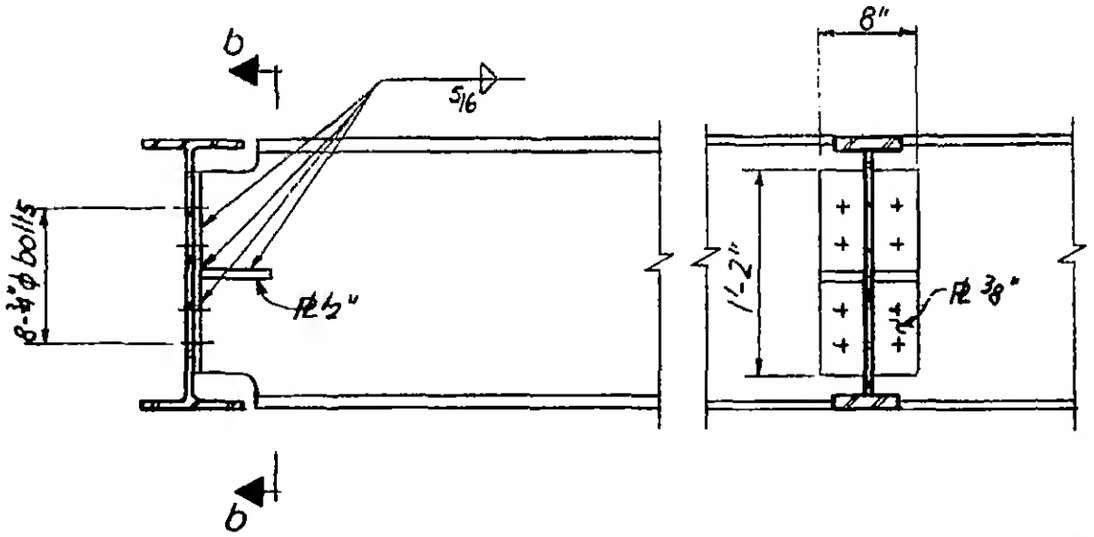

Section a-a

Section b-b

Detail D

6-AB9-5

REGISTERED PROFESSIONAL ENGINEER
LESLIE E. ROBERTSON
No. 34360
STATE OF NEW YORK