SKILLING - HELLE - CHRISTIANSEN - ROBERTSON Structural & Civil Engineers

PROJECT THE WORLD TRADE CENTER | TITLE TEMP. FRAMING FOR ELEVATOR #6 & #7 - DETAIL C | DATE 1-12-68

REVISIONS

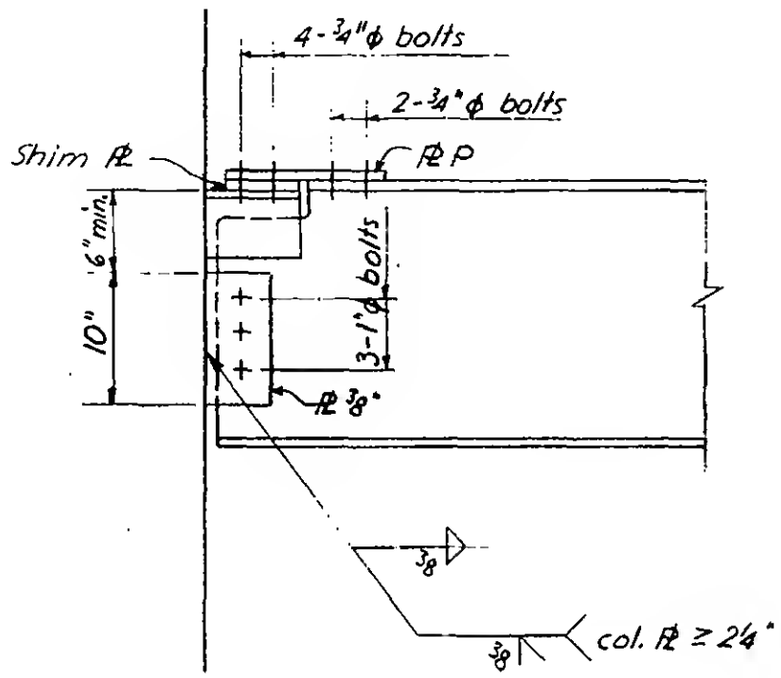

Section a-a

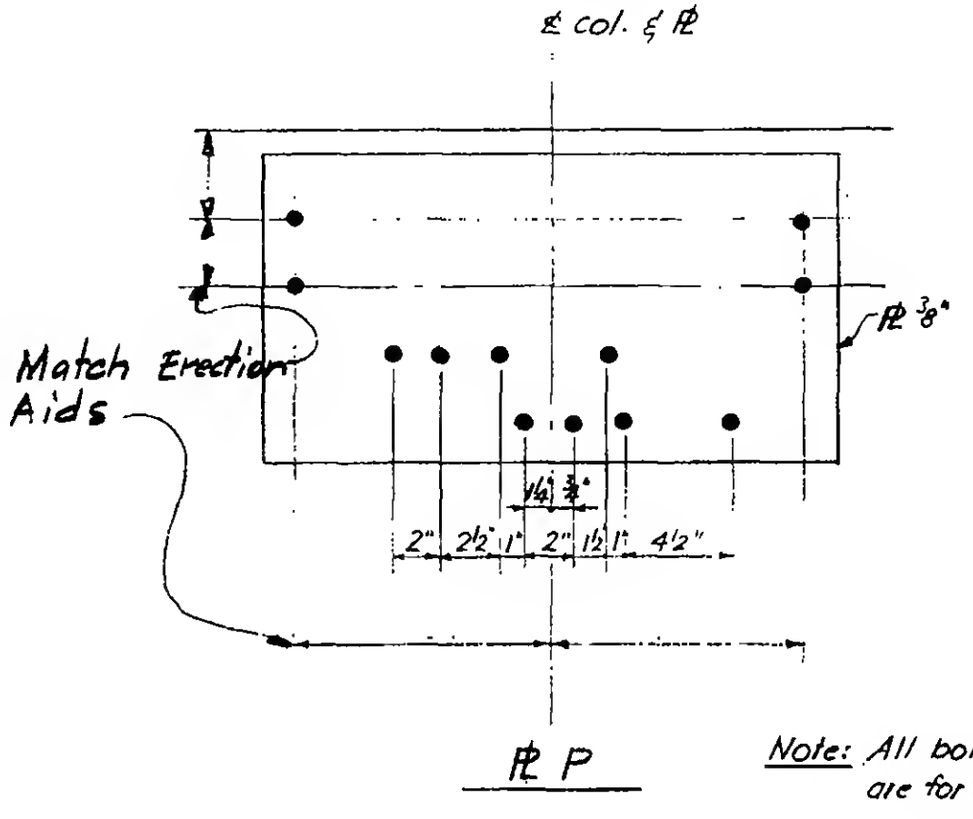

℄ P

Note: All bolt holes are for ¾"ϕ bolts

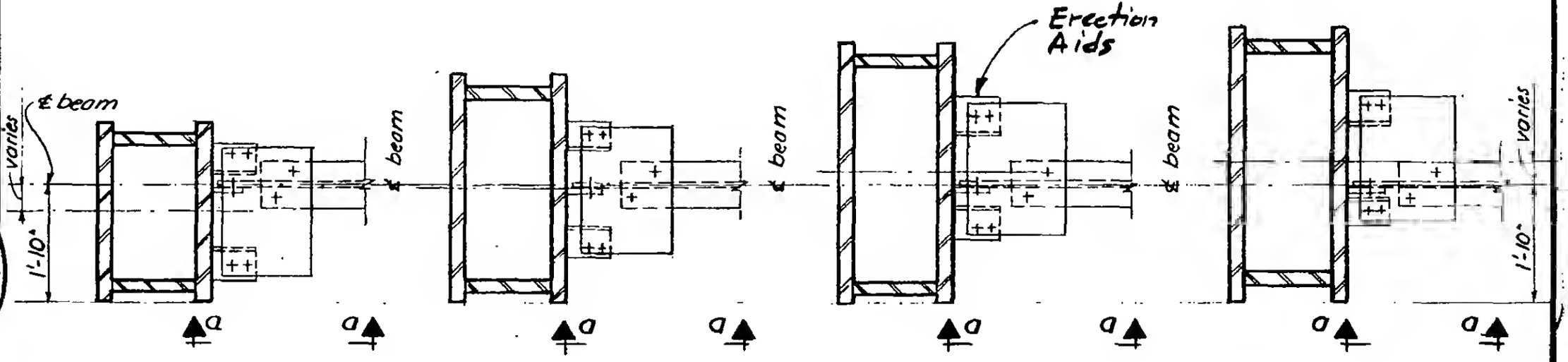

Plan
Col. 1003 Floor 63

Plan
Col. 1003 Floor 54

Plan
Col. 1003 Floor 48
Col. 1004 Floor 63

Plan
All other cases

LICENSED PROFESSIONAL ENGINEER
LESLIE E. ROBERTSON
No. 24360
STATE OF NEW YORK

6-AB9-6