SKILLING - HELLE - CHRISTIANSEN - ROBERTSON Structural & Civil Engineers

PROJECT THE WORLD TRADE CENTER | TITLE TEMP. FRAMING FOR ELEVATOR #6 & #7 - DETAIL E | DATE 1-12-68

REVISIONS

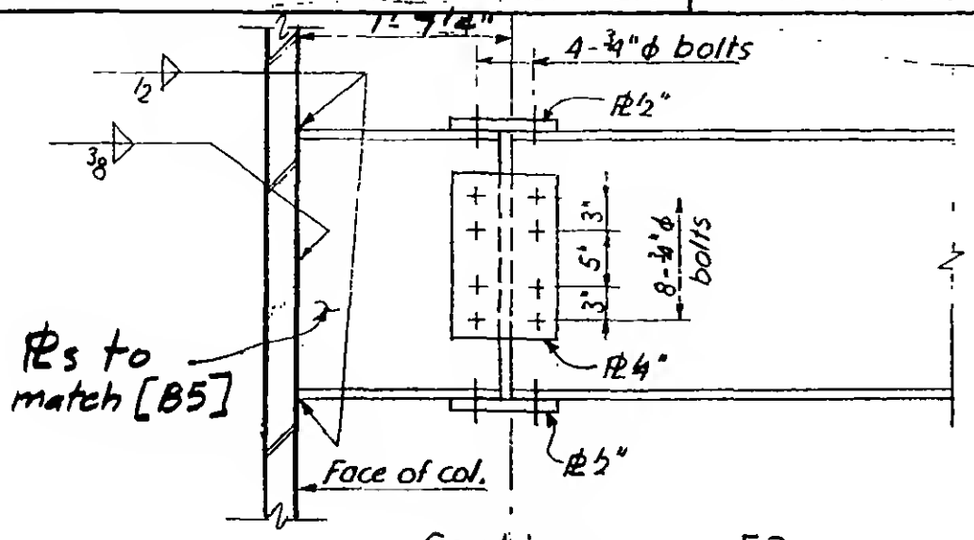

Section a-a - E3

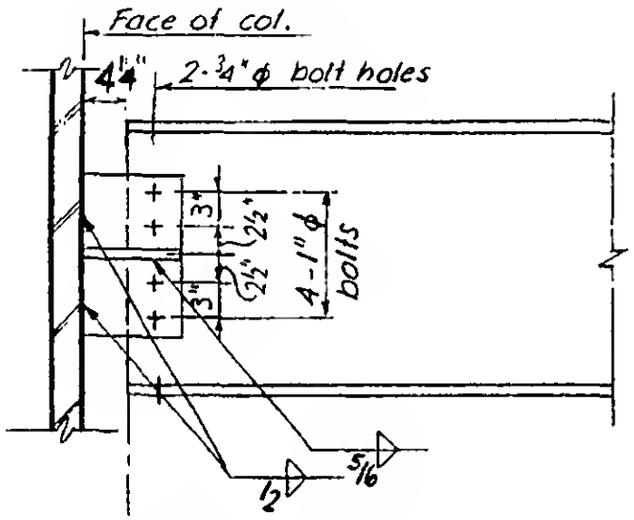

Section a-a - E2

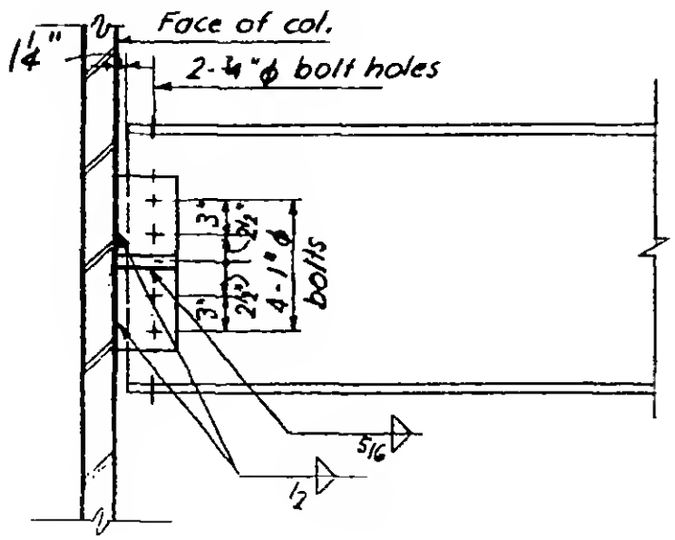

Section a-a - E1

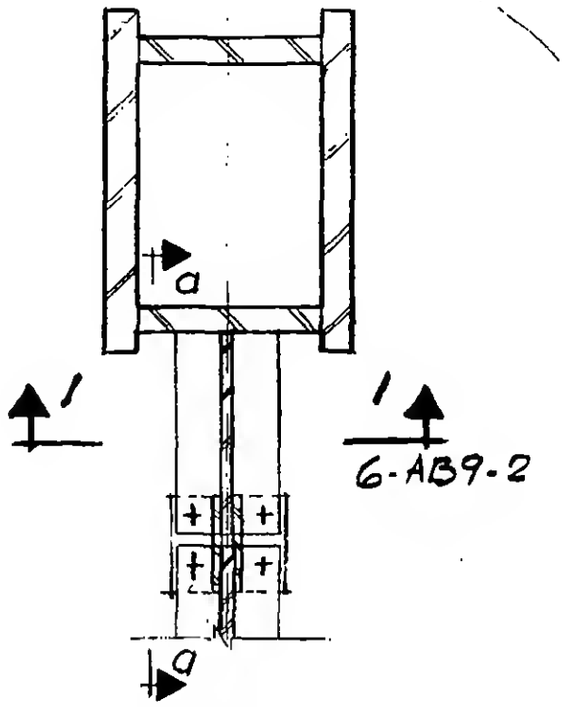

Plan E3

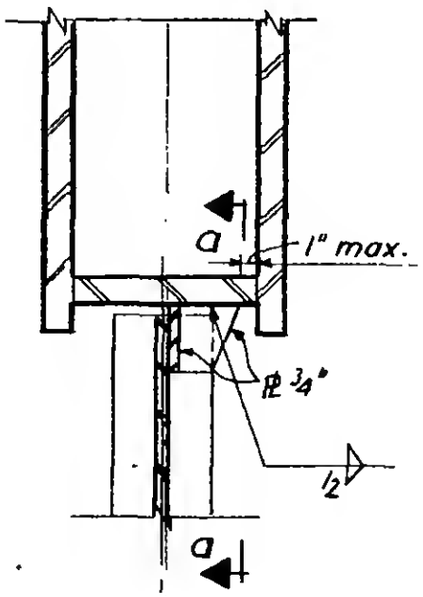

Plan E1 & E2

6-AB9-7

LICENSED PROFESSIONAL ENGINEER
LESLIE E. ROBERTSON
No. 34360
UNIVERSITY OF THE STATE OF NEW YORK