SKILLING - HELLE - CHRISTIANSEN - ROBERTSON Structural & Civil Engineers

PROJECT THE WORLD TRADE CENTER | TITLE TEMPORARY ELEVATOR SUPPORT @ 7TH FL.- DETAILS | DATE 3-29-68

REVISIONS

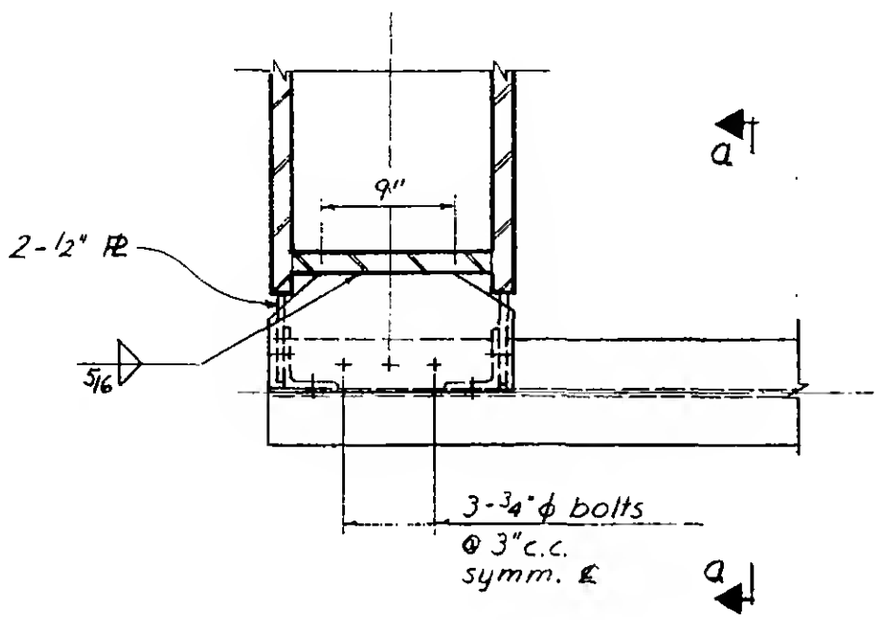

Plan
Detail A

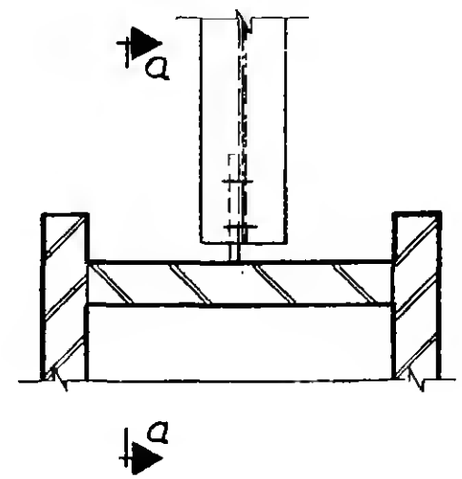

Plan
Detail B

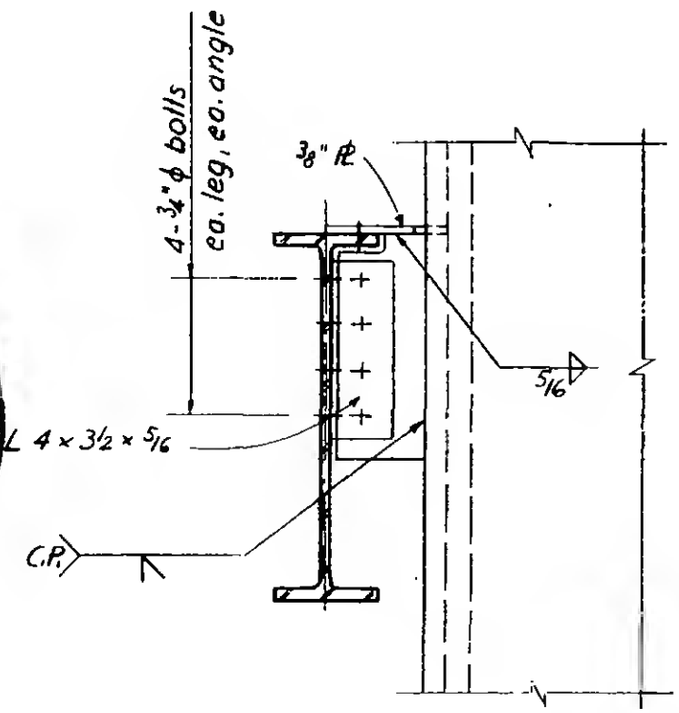

Section a-a

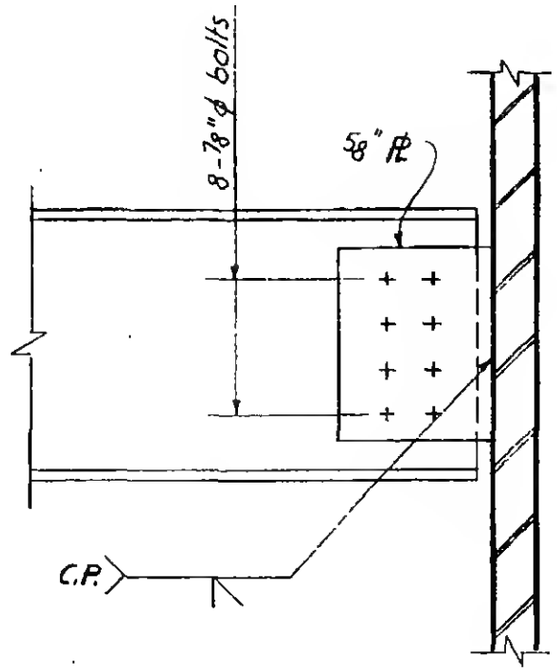

Section a-a

LICENSED PROFESSIONAL ENGINEER
LESLIE E. ROBERTSON
No. 34360
UNIVERSITY OF THE STATE OF NEW YORK

6-AB9-9