SKILLING, HELLE, CHRISTIANSEN, ROBERTSON — Structural & Civil Engineers

PROJECT: THE WORLD TRADE CENTER | TITLE: FL 107-PH TYPICAL DETAILS-TRUSS CONNECTIONS | DATE: 4-1-70

REVISIONS
5-27-70
6-15-70
7-8-70

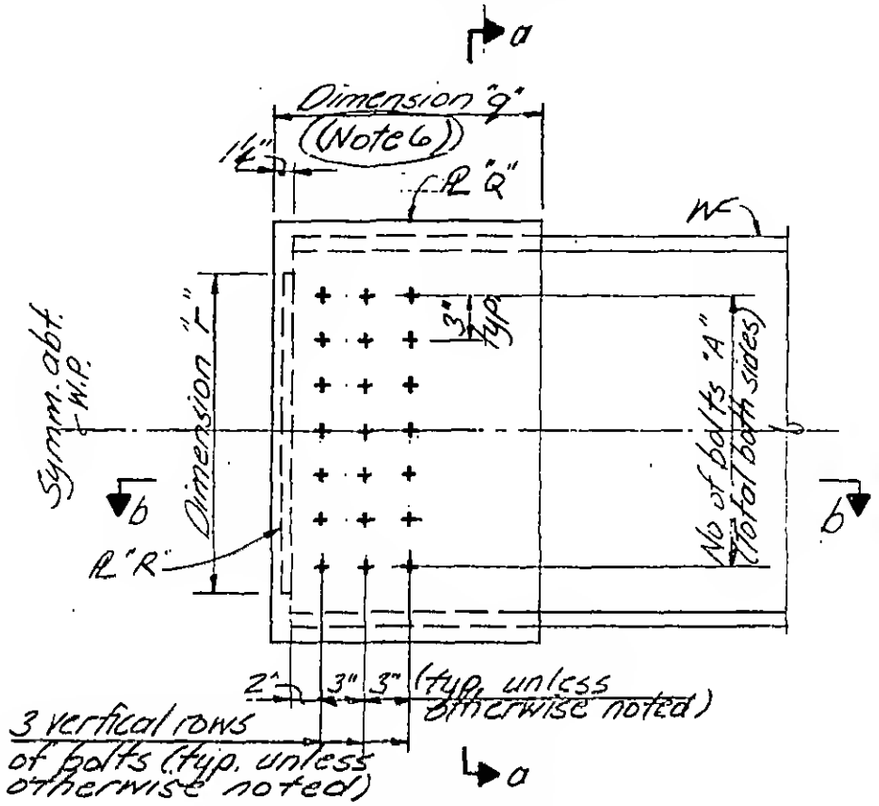

Beam End Elevation

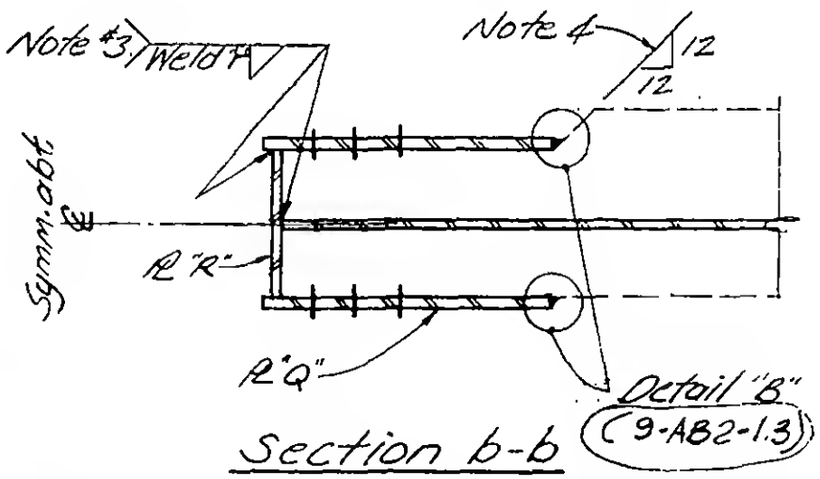

Section b-b

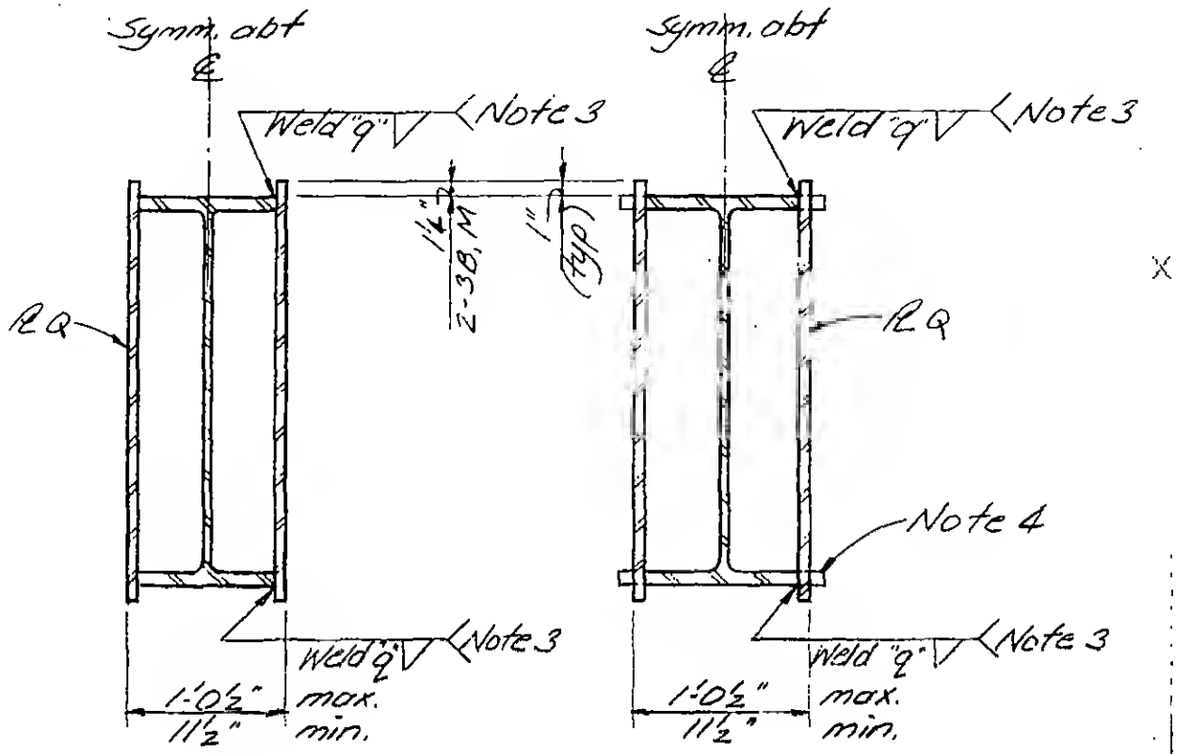

Section a-a

SCHEDULE

BEAM	TYPE	NO. OF BOLTS "A"	℄ "Q" x Dim "q"	Weld "q"	℄ "R" x Dim "r"	Weld "r"	Remarks
36WF	2-3A	36	1"x1'-6"	¾"	⅝" x 2'-6"	7/16"	
30WF	2-3B	48	1"x1'-6"	15/16"	⅝" x 2'-0"	⅜"	
	2-3C	30	1"x1'-6"	⅝"	⅝" x 2'-0"	⅜"	
27WF	2-3D	36	1"x1'-6"	¾"	⅝" x 1'-9"	5/16"	
	2-3E	24	1"x1'-6"	7/16"	⅝" x 1'-9"	5/16"	
24WF	2-3F	36	1"x1'-6"	11/16"	⅝" x 1'-6"	5/16"	
	2-3G	24	1¼"x1'-6"	7/16"	⅝" x 1'-6"	5/16"	
21WF	2-3H	18	1¼"x1'-0"	7/16"	⅝" x 1'-3"	5/16"	
18WF	2-3K	30	1"x1'-6"	11/16"	⅝" x 1'-3"	5/16"	
24WF	2-3M	48	1"x1'-6"	1"	⅝" x 1'-6"	⅜"	Note #5
	2-3N	36	1"x1'-6"	¾"	⅝" x 1'-6"	5/16"	

Notes:
1. All bolts are friction type, 1"ϕ A490. All holes in beam end are 1/16" larger than nominal bolt diameter.
2. ℄ "Q" & ℄ "R" Fy36 material.
3. Fillet welds "q" & "r" can be substituted by equivalent capacity groove welds
4. If beam flange width exceeds 10½" cut top & bottom flanges as shown.
5. Provide 4 vertical rows at 3" spacing.
6. Minimum dimension required. Increase dimension shown on Schedule as noted on specific details.

LICENSED PROFESSIONAL ENGINEER — LESLIE E. ROBERTSON — NO. 34360 — UNIVERSITY OF THE STATE OF NEW YORK

DESIGNED: E. Drakos
DRAWN: J. Adams
REVIEWED: E. Drakos

9-AB2-3