SKILLING, HELLE, CHRISTIANSEN, ROBERTSON — Structural & Civil Engineers

PROJECT: THE WORLD TRADE CENTER | TITLE: FL 107-PH TYPICAL DETAILS-TRUSS CONNECTIONS | DATE: 4-1-70

REVISIONS

5/27/70

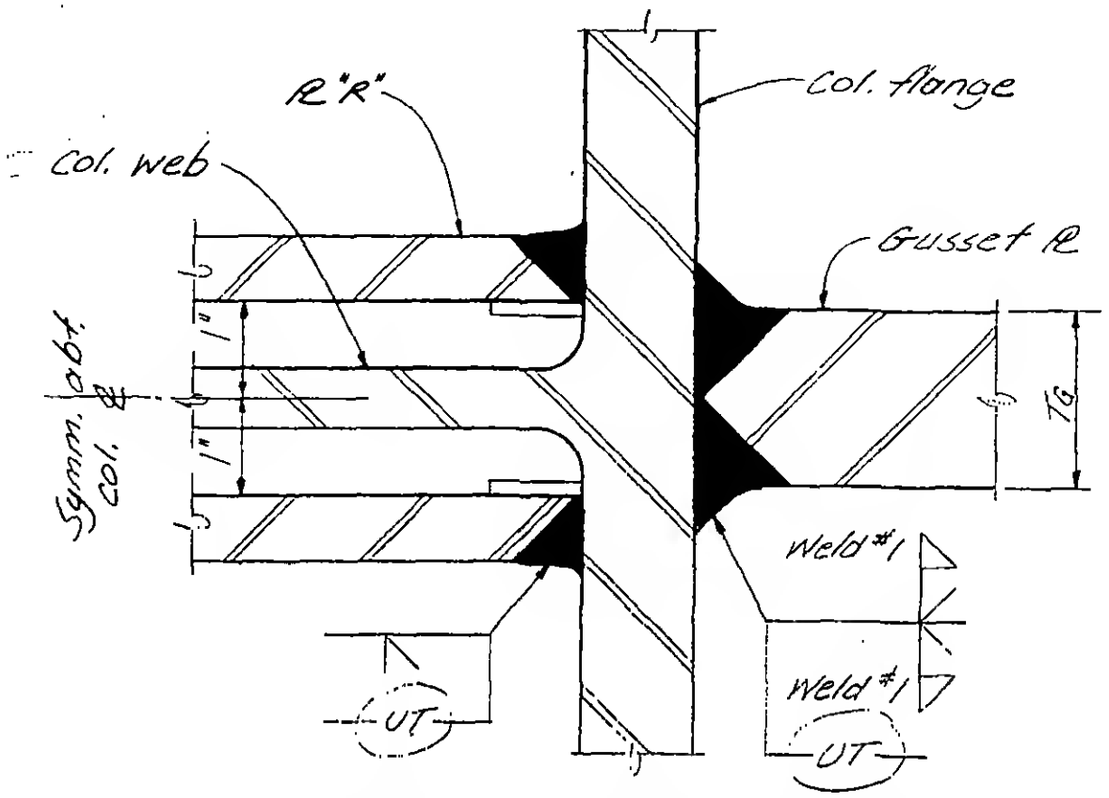

Typical Gusset Plate to Column Weldment Thru Plate "R"

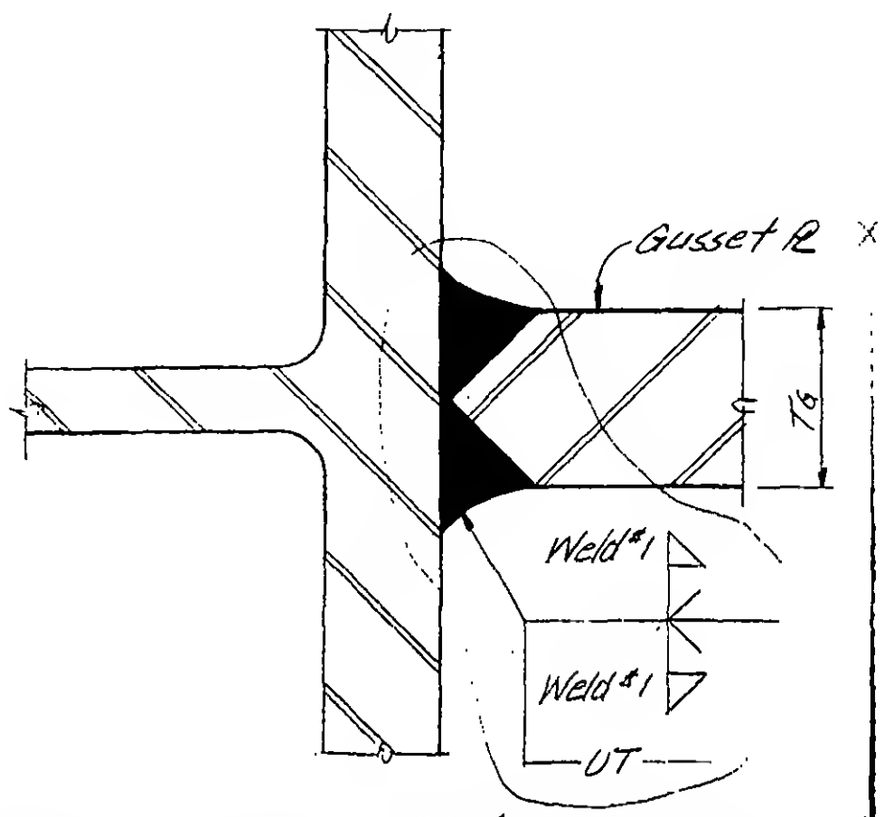

Typical Gusset Plate to Column Weldment Above & Below Plate "R"

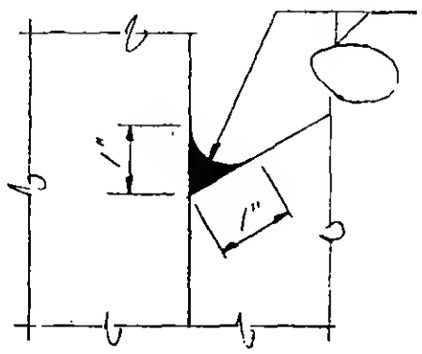

Detail "A"

SCHEDULE

TYPE	GUSSET PL TG	WELD #1	PL "R"	REMARKS
2-4V	7/8"	1/8	None	
2-4W	5/8"	1/8	None	
2-4X	1 3/4"	3/8	1/2"	
2-4Y	1 1/2"	1/4	1/2"	
2-4Z	1/4"	1/4	3/8"	

Notes:
1. All gusset plates and plates "R" are Fy=50 material.
2. PL "R" is determined by the heaviest gusset PL existing at the connection. Depth of plate "R" equals the nominal depth of the deepest beam framing at the connection, or as shown in specific details.
3. All holes in gusset plate are 3/16" larger than the nominal bolt diameter.

LICENSED PROFESSIONAL ENGINEER — LESLIE E. ROBERTSON — No. 34360 — UNIVERSITY OF THE STATE OF NEW YORK

DESIGNED E. Drakos

DRAWN J. Adams

REVIEWED E. Drakos

9-A82-4.3