SKILLING, HELLE, CHRISTIANSEN, ROBERTSON — Structural & Civil Engineers

PROJECT: THE WORLD TRADE CENTER | TITLE: FL 107-PH TYPICAL DETAILS-TRUSS CONNECTIONS | DATE: 4-1-70

REVISIONS
5/27/70
6-15-70

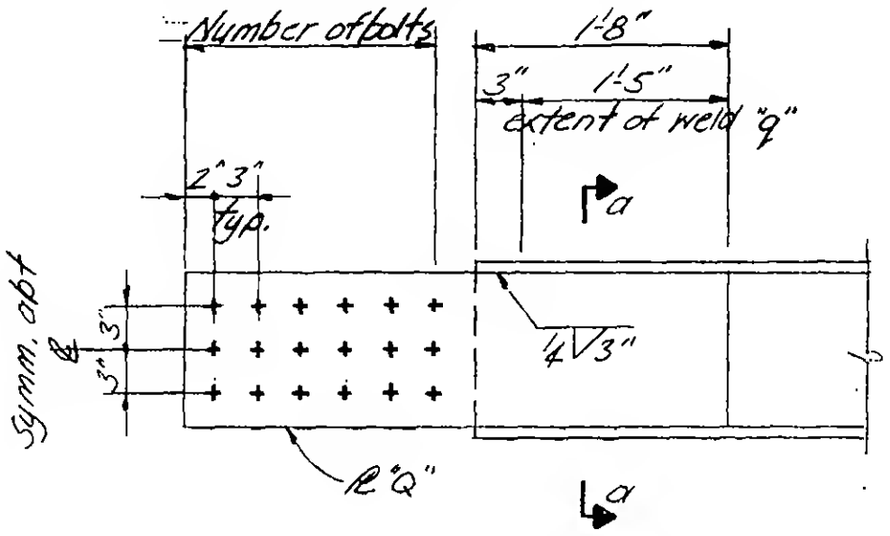


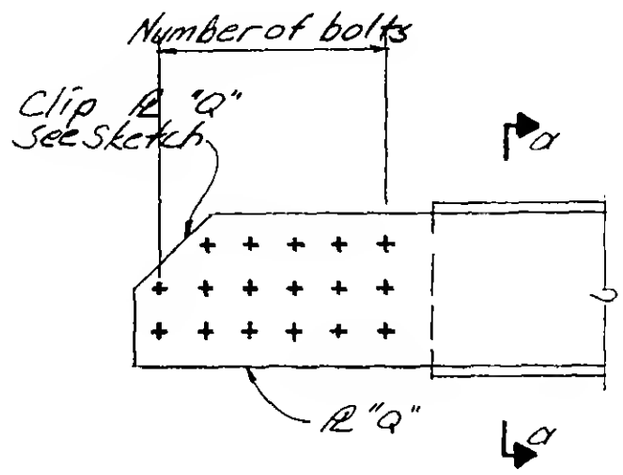


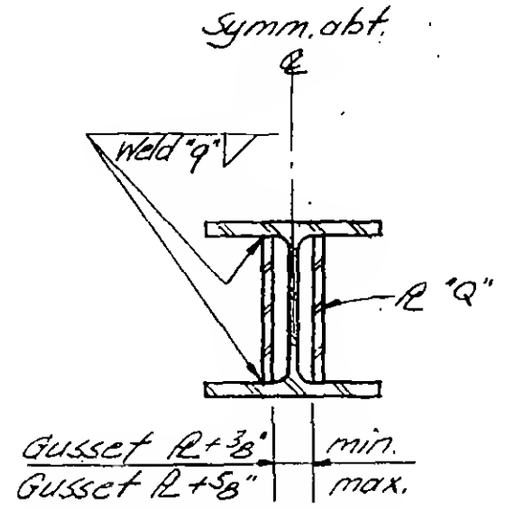


Section a-a

## Diagonal End Elevation

| SCHEDULE | | | | | |
|---|---|---|---|---|---|
| TYPE | NO. OF BOLTS | ℄ "Q" | Fy | WELD "q" | REMARKS |
| 2-5A | 17 | ¼" | 50 | ⅝" | Note 2 |
| 2-5B | 14 | 1" | 50 | ½" | Note 2 |
| 2-5C | 11 | ¾" | 50 | 7/16" | Note 2 |
| 2-5E | 17 | 1¼" | 50 | ¾" | Note 2 |
| 2-5F | 14 | 1" | 50 | ⅝" | Note 2 |
| 2-5G | 11 | ¾" | 50 | ½" | Note 2 |

Notes:
1. All bolts are friction type, 1"Ø, A490. All holes in ℄s "Q" are 1/16" larger than nominal bolt diameter.
2. Number of bolts shown in Schedule is minimum required. In a non-clipped diagonal add one more bolt to the total number of bolts shown in the Schedule.
3. Fillet weld "q" can be substituted by equivalent capacity partial penetration groove weld.

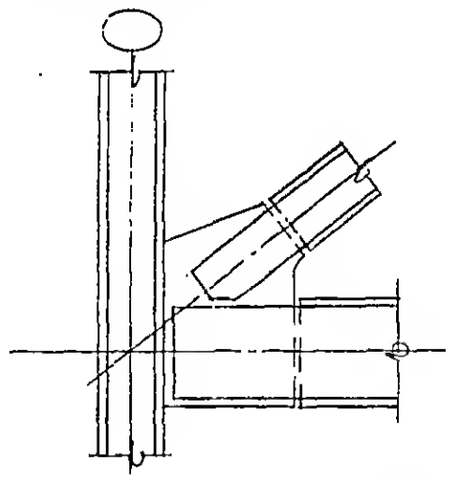

℄ "Q" Interference with Beam

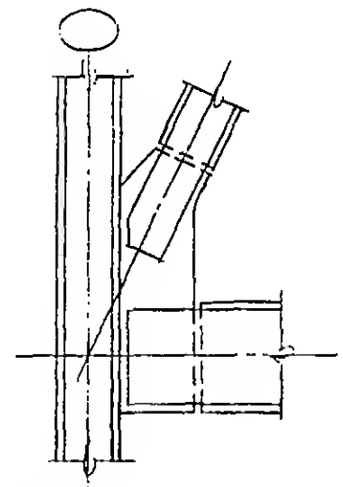

℄ "Q" Interference with Column

Sketch

LICENSED PROFESSIONAL ENGINEER — LESLIE E. ROBERTSON — No. 34960 — UNIVERSITY OF THE STATE OF NEW YORK

SIGNED: E. Drakos
DRAWN: I. Adams
REVIEWED: E. Drakos

9-ABZ-5