SKILLING, HELLE, CHRISTIANSEN, ROBERTSON — Structural & Civil Engineers

PROJECT: THE WORLD TRADE CENTER | TITLE: FL 107-PH TYPICAL DETAILS-TRUSS CONNECTIONS | DATE: 4-1-70

REVISIONS
5/27/70
6-15-70

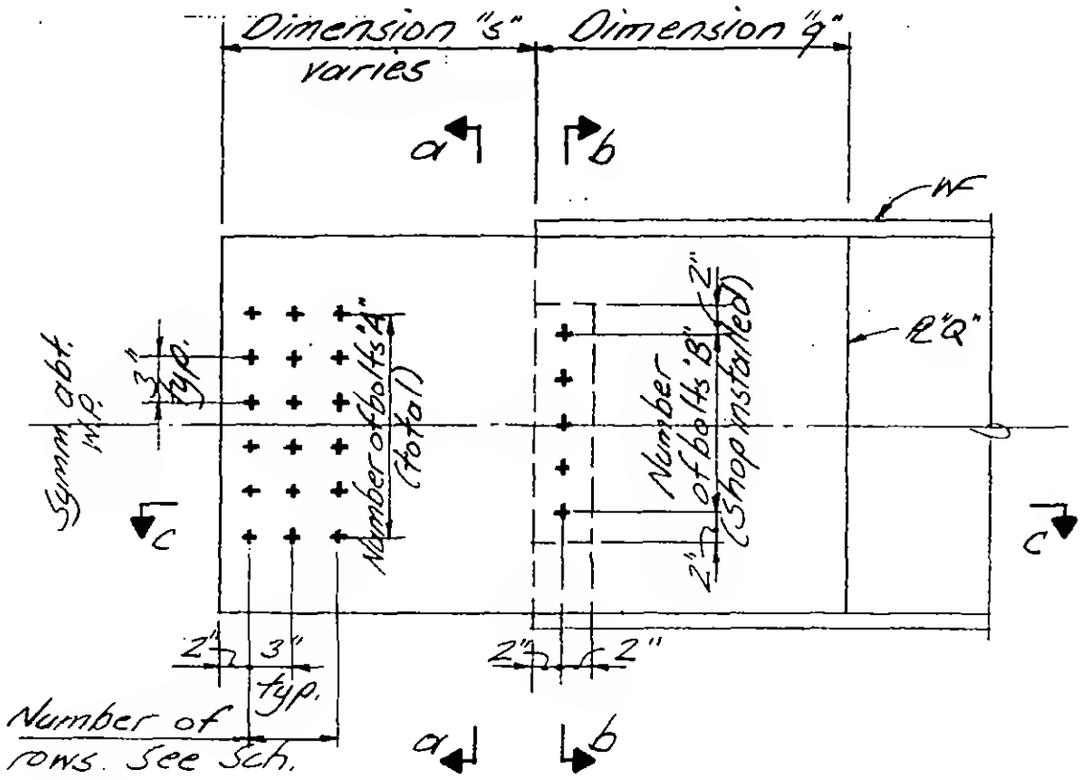

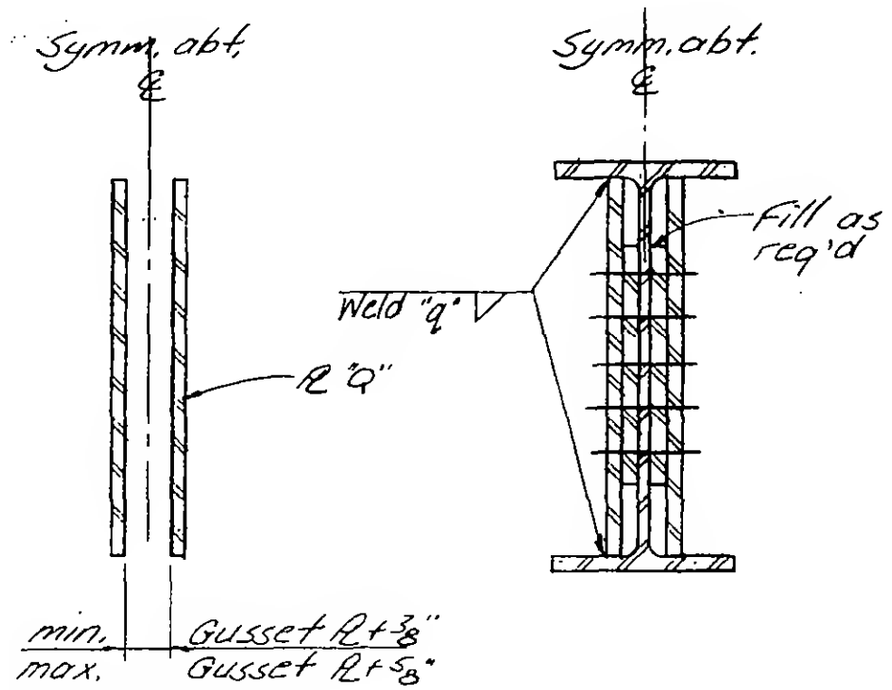

Section a-a

Section b-b

Beam End Elevation

Dimension "S" ≤ 1'-6"
(See 2-6.2 for dim. "S" ?1'-6")

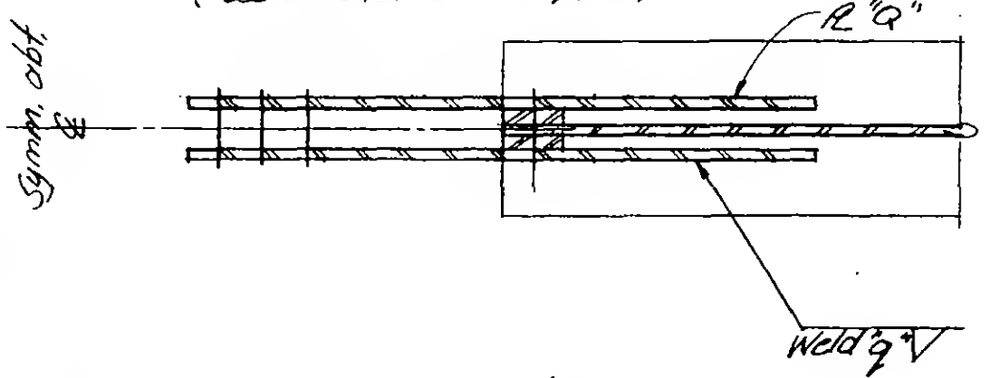

Section c-c

SCHEDULE

BEAM	TYPE	NO. BOLTS "A" NO. OF ROWS	NO. BOLTS "A" TOTAL BOLTS	R "Q" x Dim "q"	Weld "q"	NO. OF BOLTS "B"	REMARKS
36WF	2-6A	3	18	3/4 x 2'-0"	5/8"	6	
30WF	2-6B	3	12	3/4 x 2'-0"	1/2"	4	
27WF	2-6D	4	20	1 x 2'-0"	3/4"	5	
	2-6E	3	12	3/4 x 1'-8"	5/8"	4	
24WF	2-6F	4	20	1 1/4 x 2'-0"	3/4"	5	
	2-6G	3	12	3/4 x 1'-8"	5/8"	4	
18WF	2-6J	3	12	1/2 x 1'-6"	9/16"	4	
24WF	2-6M	4	24	1 1/4" x 2'-0"	15/16"	5	
	2-6N	4	20	1 1/4" x 2'-0"	13/16"	4	

Notes:

1. All bolts are friction type, 1"Φ, A490. All holes in beam ends are 1/16" larger than nominal bolt diameter.
2. Plate "Q" is Fy50 material.
3. Weld "q" can be substituted by an equivalent capacity partial penetration groove weld.

LICENSED PROFESSIONAL ENGINEER — LESLIE E. ROBERTSON — No. 34360 — UNIVERSITY OF THE STATE OF NEW YORK

DESIGNED: E. Drakos
DRAWN: J. Adams
REVIEWED: E. Drakos

9-AB2-6.1