SKILLING, HELLE, CHRISTIANSEN, ROBERTSON — Structural & Civil Engineers

PROJECT THE WORLD TRADE CENTER | TITLE FLOOR TOT-PA MEMBER TYPES - BOLT UP | DATE 4-1-70

REVISIONS

5-27-70
7-13-70

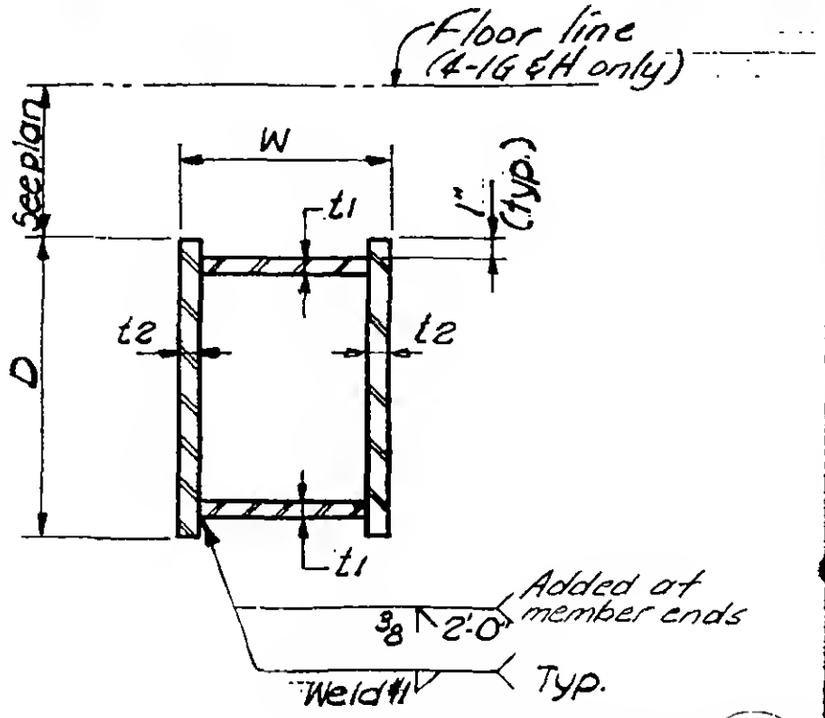

Type: 4-1A, B, C, D, G, H & J

Schedule

Type	D(in)	W(in)	t1(in)	t2(in)	Fy(ksi)	Weld #1	Remarks
4-1A	26	18	1	3/4	50	3/8	Note 1
4-1B	26	18	1	3/4	50	3/8	Note 1
4-1C	30	18	1	3/4	50	3/8	Note 1
4-1D	30	18	1	3/4	50	3/8	Note 1
4-1E	16	5½	3/8	3/4	36	1/4	4-1.2
4-1F	27	5½	3/8	1/2	36	1/4	4-1.2
4-1G	35	15	1 3/4	1/2	50	3/8	4-1.2
4-1H	35	15	3/4	1/2	50	5/16	4-1.2
4-1J	12	5½	3/4	3/4	36	5/16	Note 1

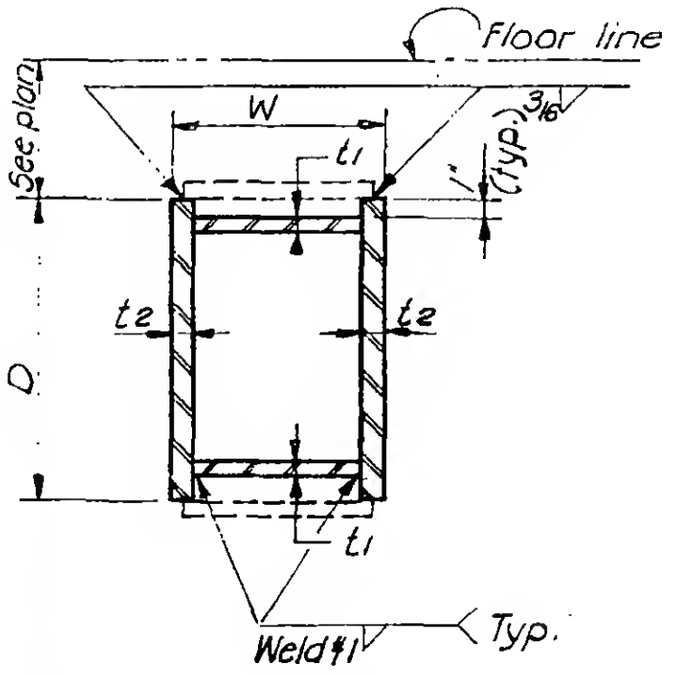

Type: 4-1E & F

Note 1. See SA-401, 402, 403 & 404 for elevations

LICENSED PROFESSIONAL ENGINEER
LESLIE E. ROBERTSON
No. 34960
UNIVERSITY OF THE STATE OF NEW YORK

DESIGNED
R. Patel
DRAWN
Nichols
REVIEWED
E. Robertson

9-AB4-1.1