SKILLING, HELLE, CHRISTIANSEN, ROBERTSON — Structural & Civil Engineers

PROJECT THE WORLD TRADE CENTER | TITLE FL 107 - PH MEMBER TYPES - BUILT UP | DATE 4-1-70

REVISIONS
5-27-70
12-14-70

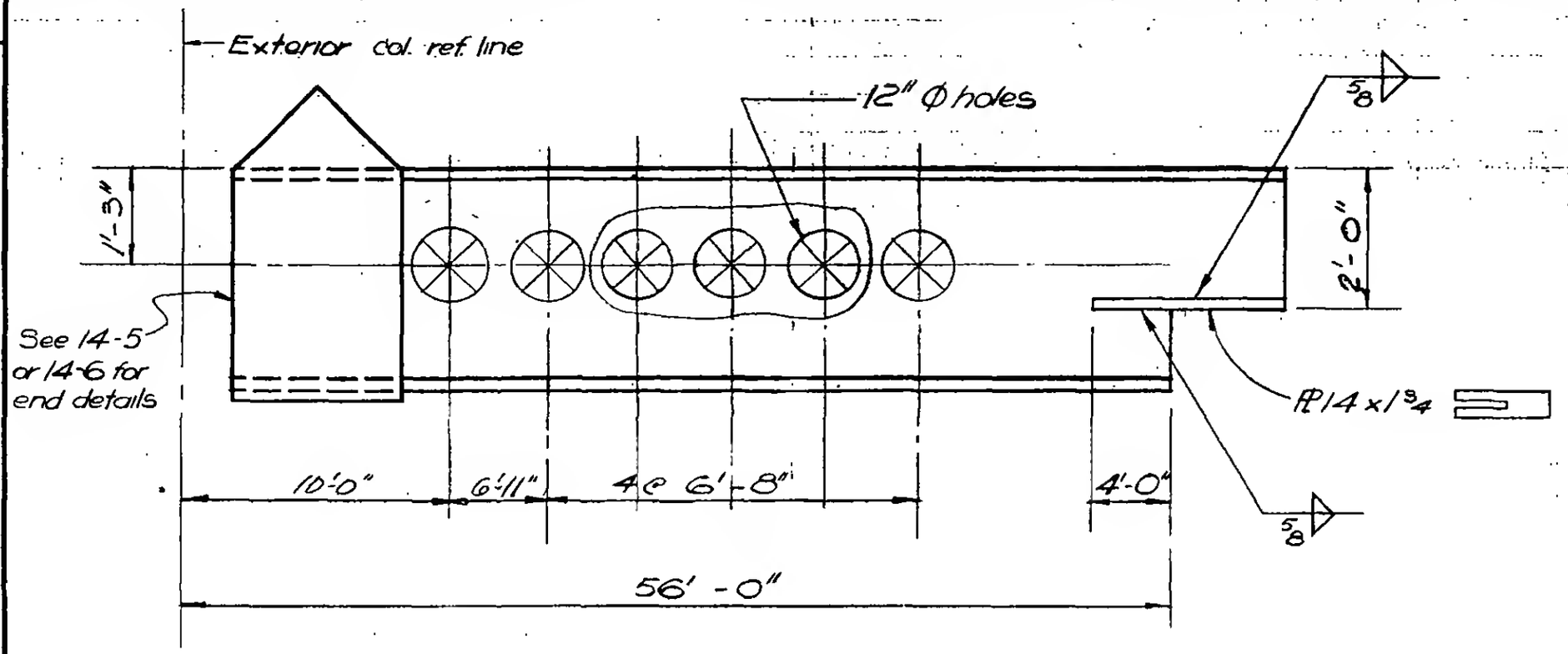

TYPE 4-2X, 4-2Y, 4-2Z

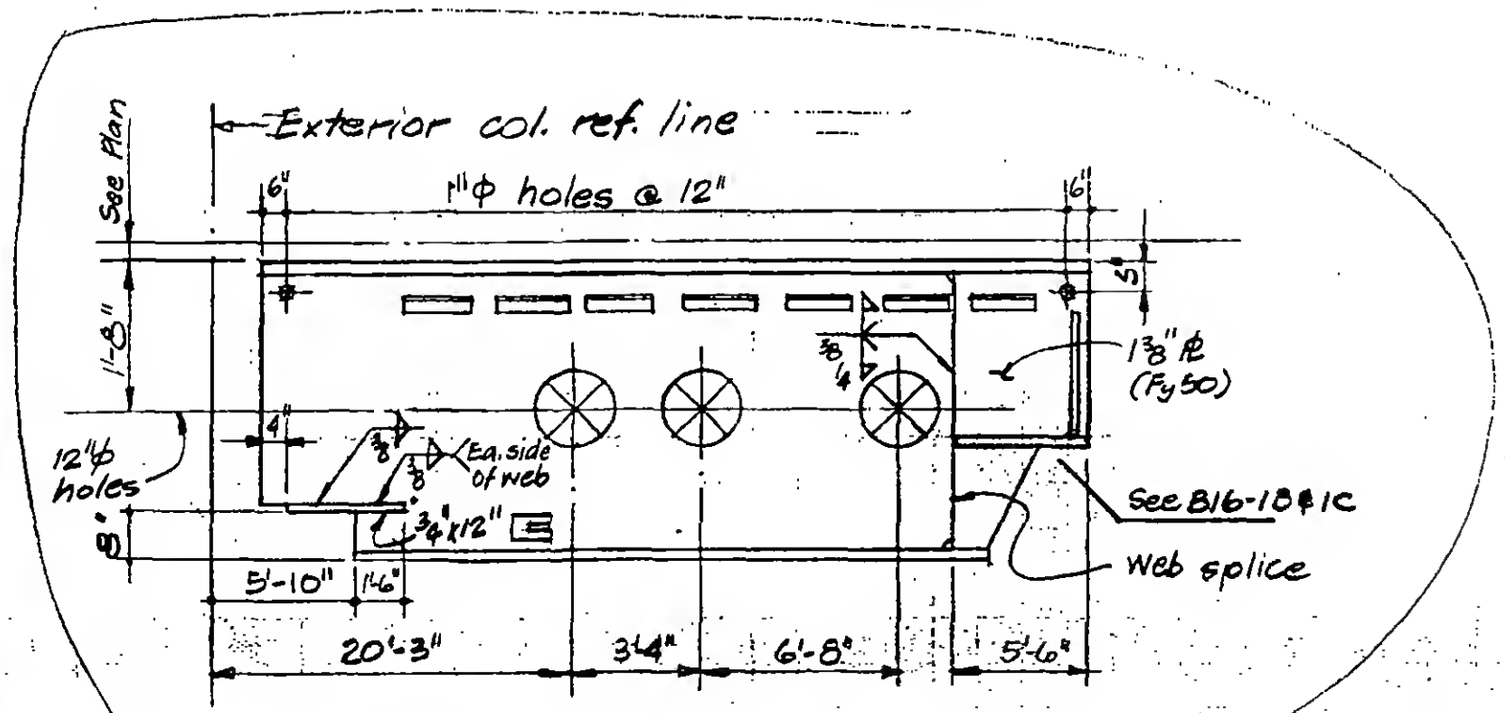

TYPE 4-2M

LICENSED PROFESSIONAL ENGINEER — LESLIE E. ROBERTSON — No. 34360 — UNIVERSITY OF THE STATE OF NEW YORK

DESIGNED A. Patel
DRAWN N. Clarke
REVIEWED E. Drakos

9-AB4-2-2