SKILLING, HELLE, CHRISTIANSEN, ROBERTSON — Structural & Civil Engineers

PROJECT THE WORLD TRADE CENTER | TITLE FL. 107 - PH. MEMBER TYPES - ROLLED SHAPE | DATE 4-1-70

REVISIONS

5/27/70
7/8/70

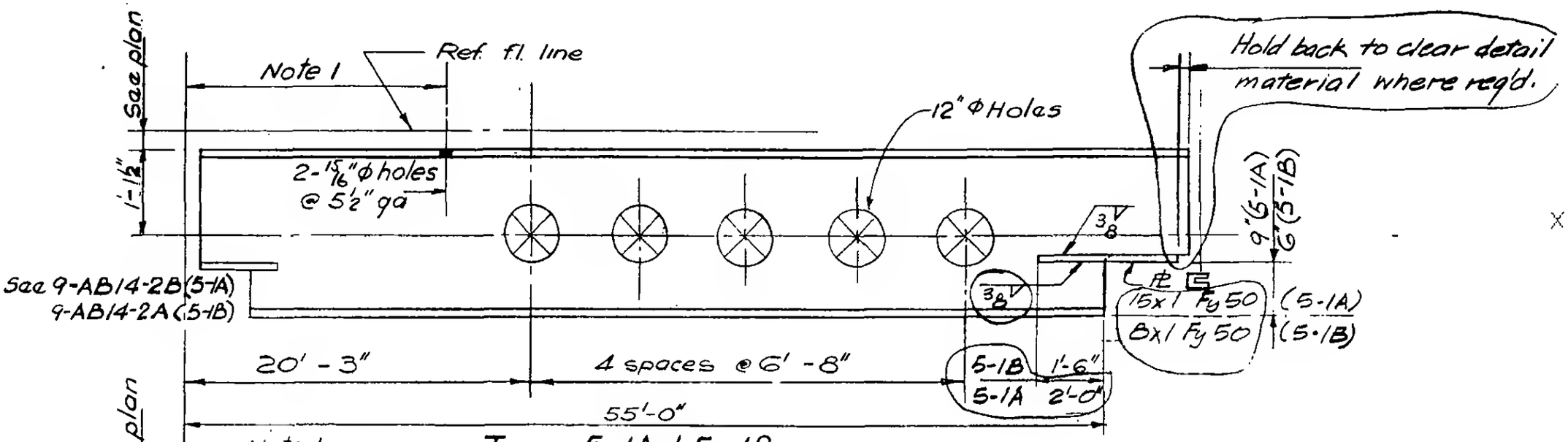


Type 5-1A & 5-1B

Note 1. Locate to accomodate erector's temporary bracing.. ..

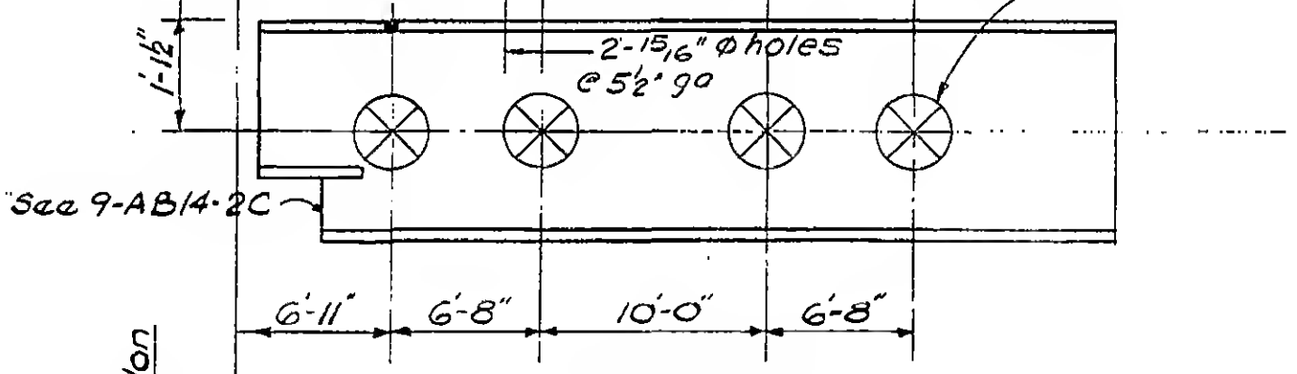


Type 5-1C

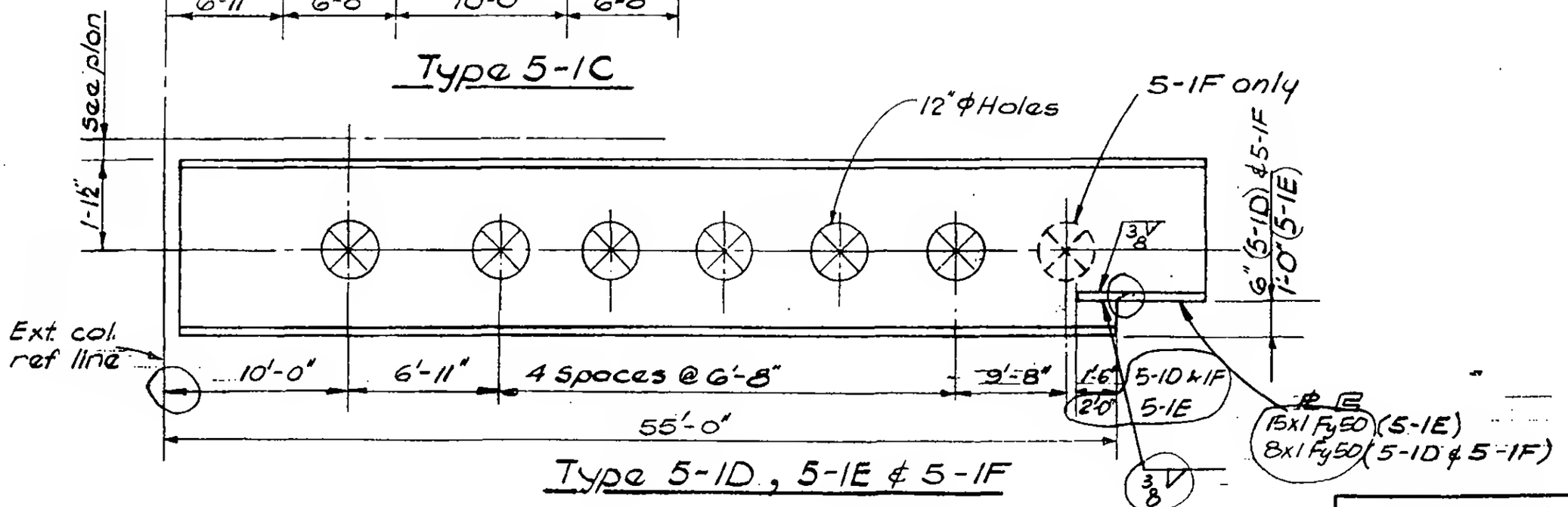


Type 5-1D, 5-1E & 5-1F

LICENSED PROFESSIONAL ENGINEER LESLIE E. ROBERTSON No. 34960 UNIVERSITY OF THE STATE OF NEW YORK

DESIGNED

DRAWN W. Clarke

REVIEWED

9-AB5-1.1