SKILLING, HELLE, CHRISTIANSEN, ROBERTSON — Structural & Civil Engineers

PROJECT THE WORLD TRADE CENTER | TITLE FL. 107-PH CONNECTIONS DETAILS - FL 107 | DATE 4-1-70

REVISIONS

5/27/70

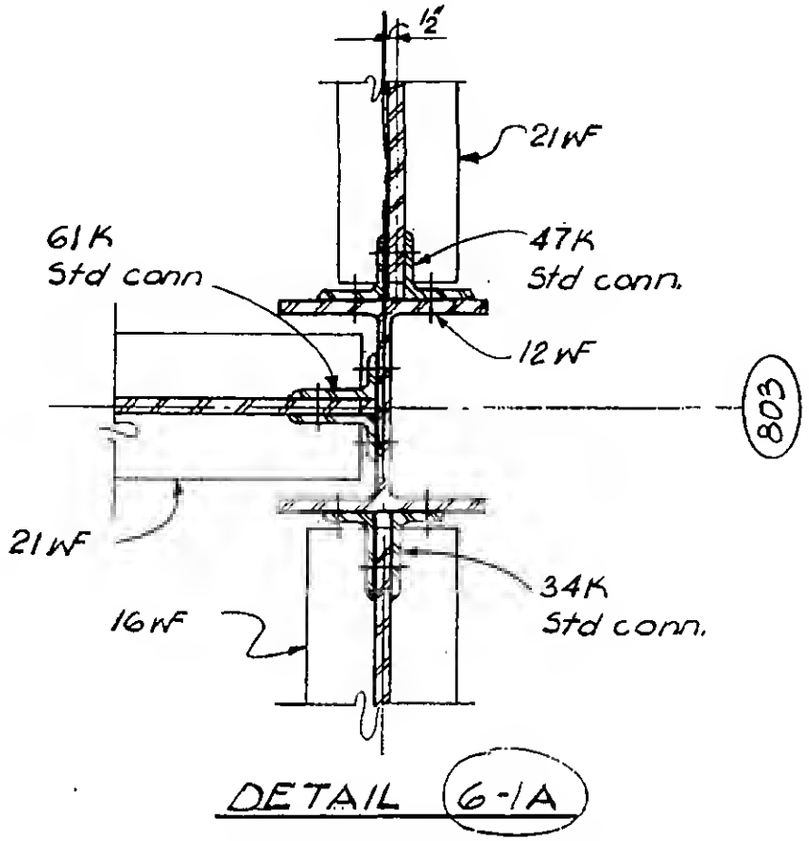

DETAIL 6-1A

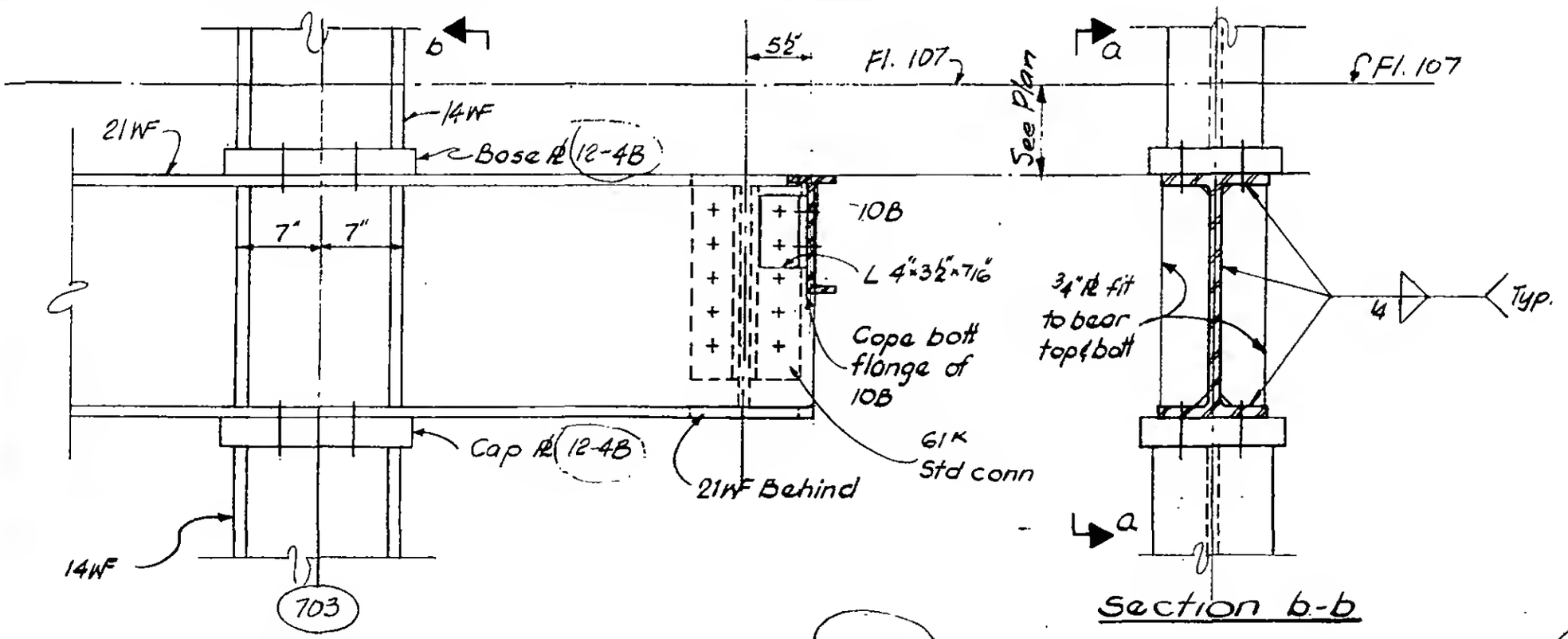

Section a-a

DETAIL 6-1B

Section b-b

LICENSED PROFESSIONAL ENGINEER — LESLIE E. ROBERTSON — No. 34360 — UNIVERSITY OF THE STATE OF NEW YORK

DESIGNED K. HWANG

DRAWN D. Huggins

REVIEWED E. Drakos

9-AB 6-1