SKILLING, HELLE, CHRISTIANSEN, ROBERTSON — Structural & Civil Engineers

PROJECT THE WORLD TRADE CENTER | TITLE Fl. 107-PH CONNECTION DETAILS - FL 107 | DATE 4-1-70

REVISIONS

5/27/70
7/8/70

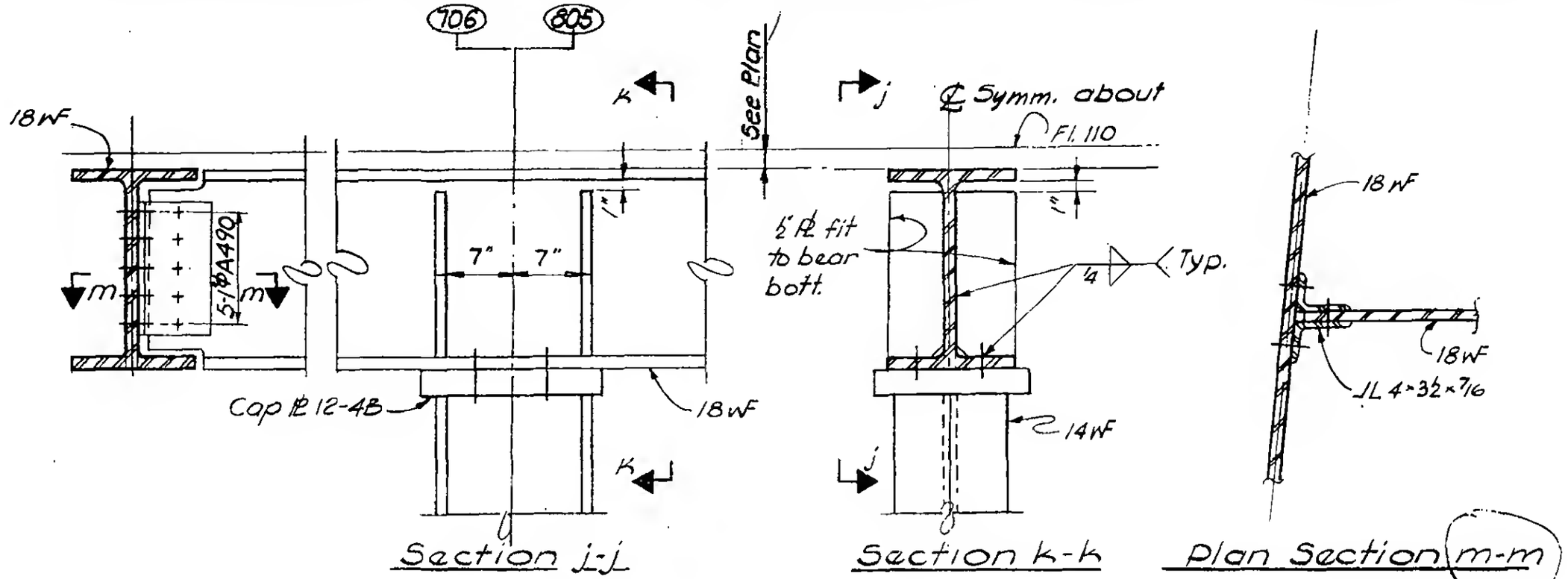

DETAIL 6-3A & 3

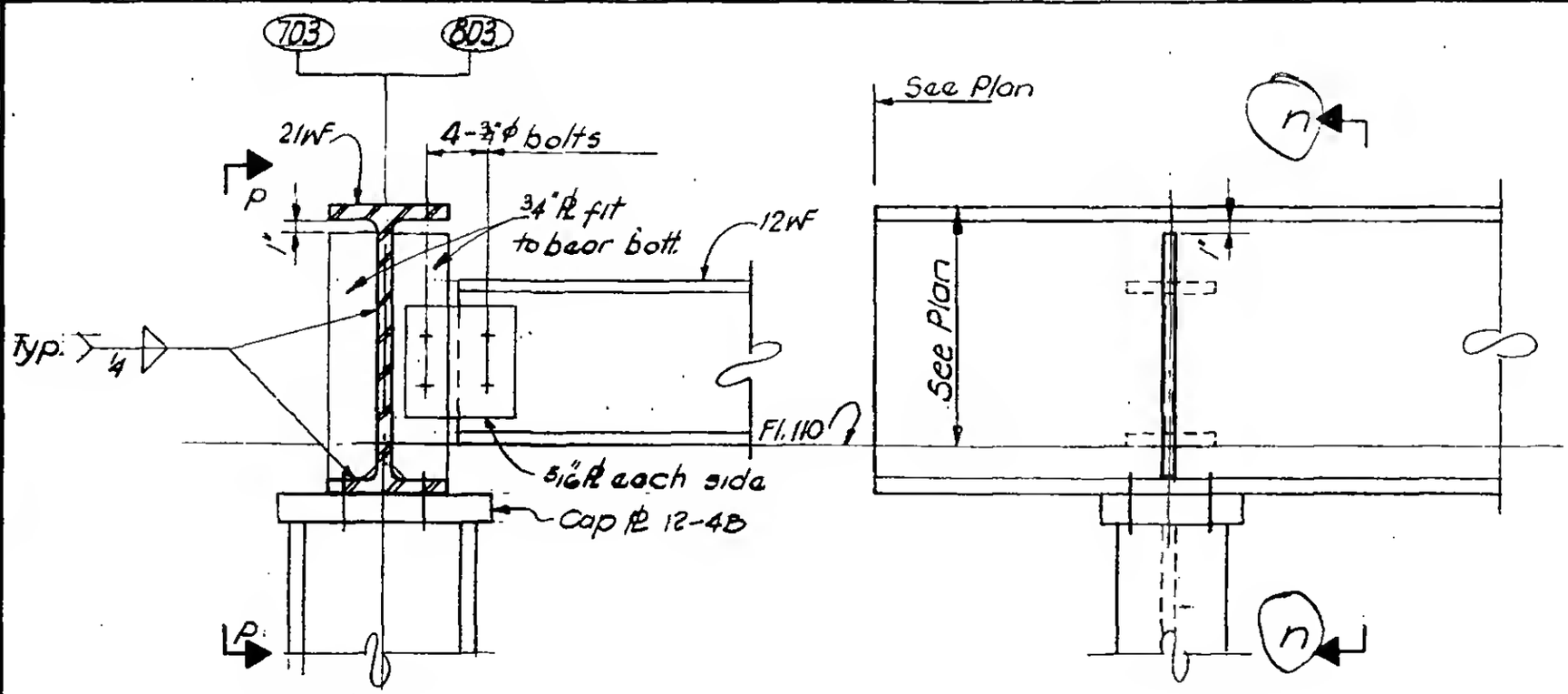

DETAIL 6-3C

LICENSED PROFESSIONAL ENGINEER — LESLIE E. ROBERTSON — No. 34360 — UNIVERSITY OF THE STATE OF NEW YORK

DESIGNED K. HWANG
DRAWN D. Huggins
REVIEWED E. Drakos

9-AB 6-3