SKILLING, HELLE, CHRISTIANSEN, ROBERTSON — Structural & Civil Engineers

PROJECT THE WORLD TRADE CENTER | TITLE FL 107-PH CONNECTION DETAILS - FL 107 | DATE 4-1-70

PROVISIONS

5/27/70

6/17/70

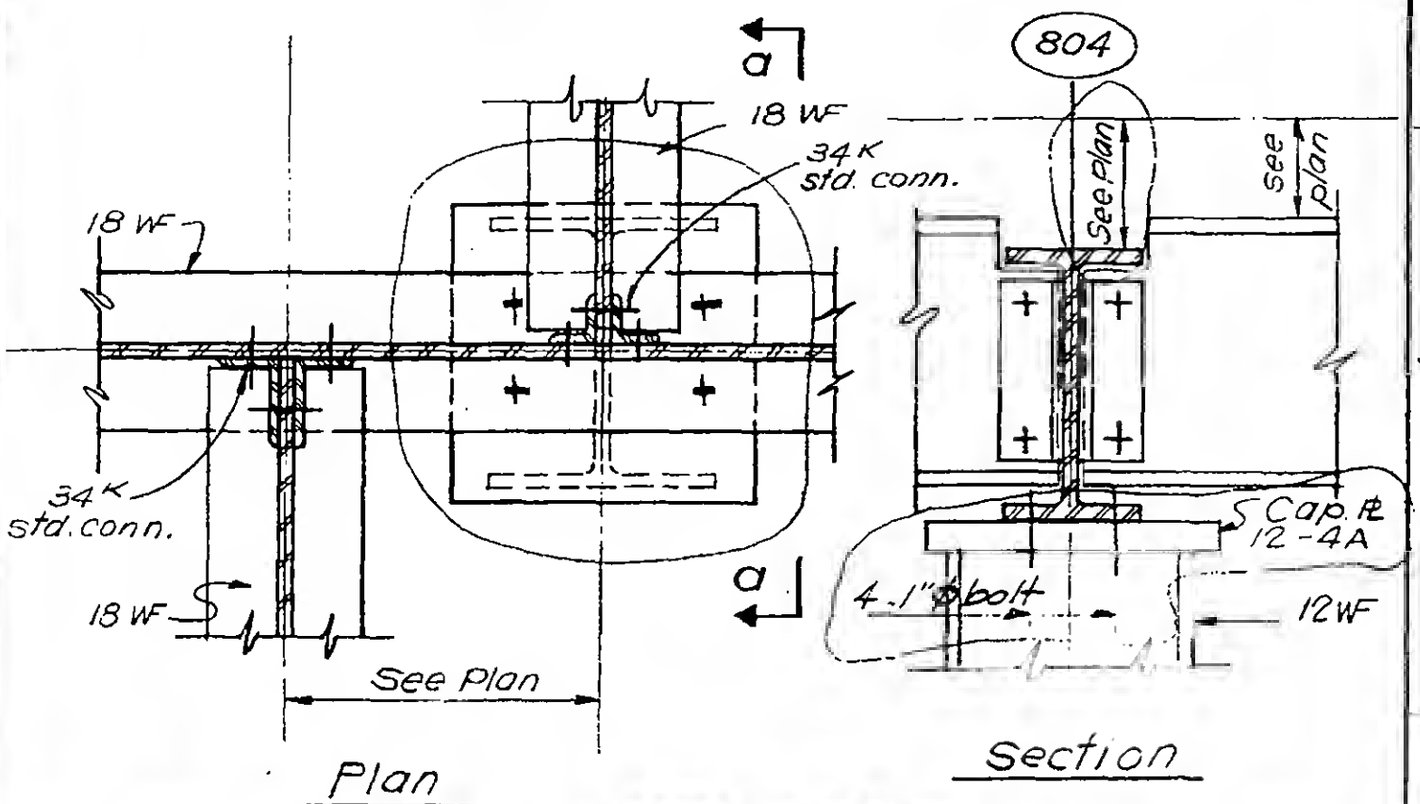

Plan

Section

DETAIL 6-4A

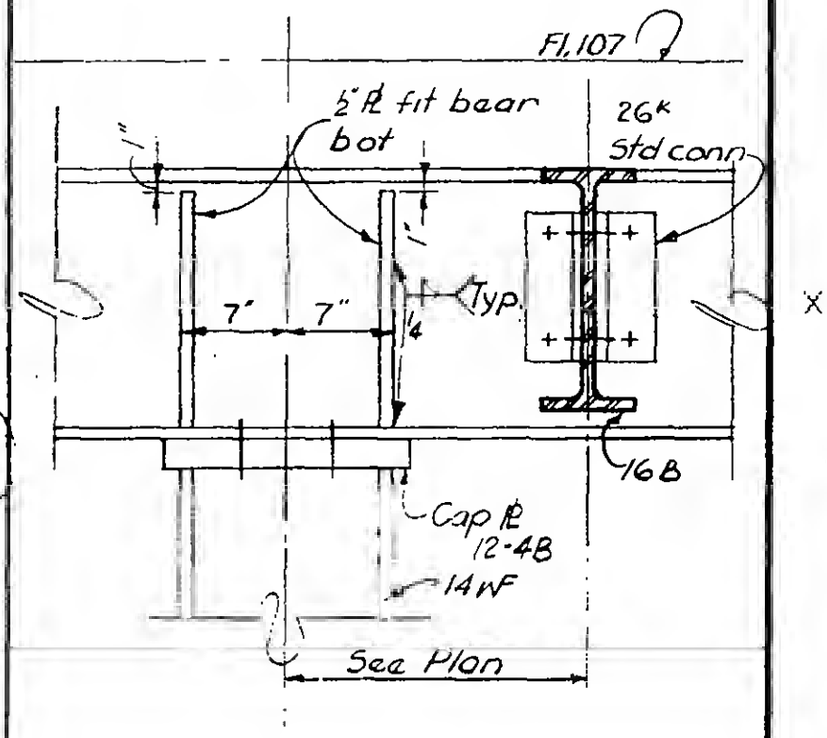

DETAIL 6-4B

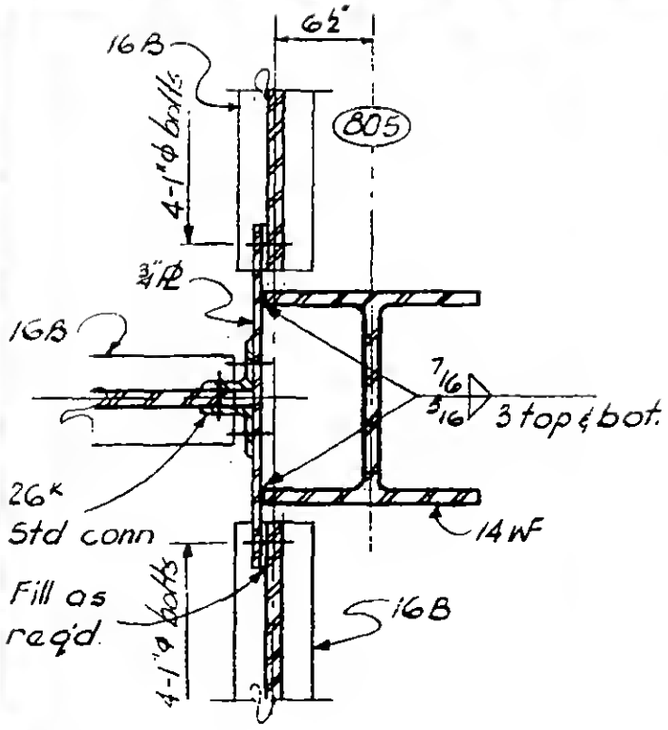

DETAIL 6-4C

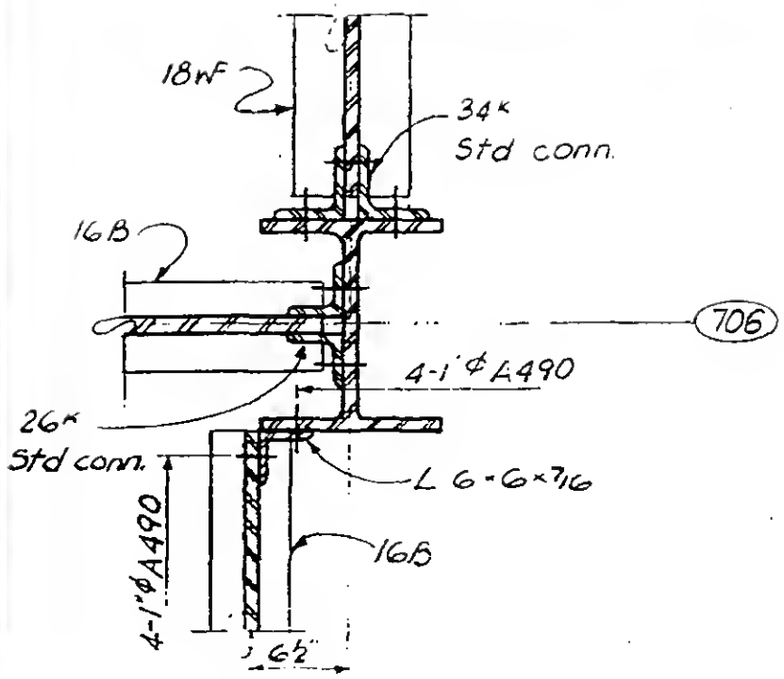

DETAIL 6-4D

LICENSED PROFESSIONAL ENGINEER LESLIE E. ROBERTSON NO 34360 UNIVERSITY OF THE STATE OF NEW YORK

DESIGNED K. Hwang

DRAWN D. Huggins

REVIEWED E. Orakos

7-AE6-4