SKILLING, HELLE, CHRISTIANSEN, ROBERTSON — Structural & Civil Engineers

PROJECT: THE WORLD TRADE CENTER

TITLE: FL 107 PH - CONNECTION DETAILS

DATE: 11-9-73

REVISIONS

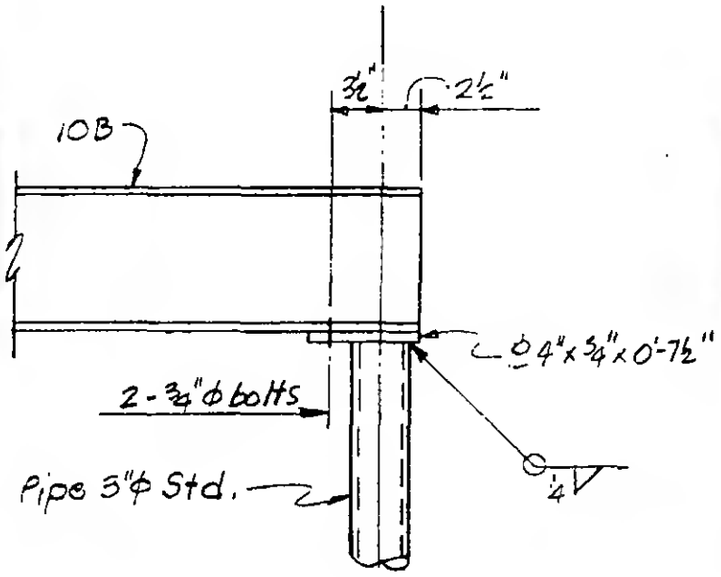

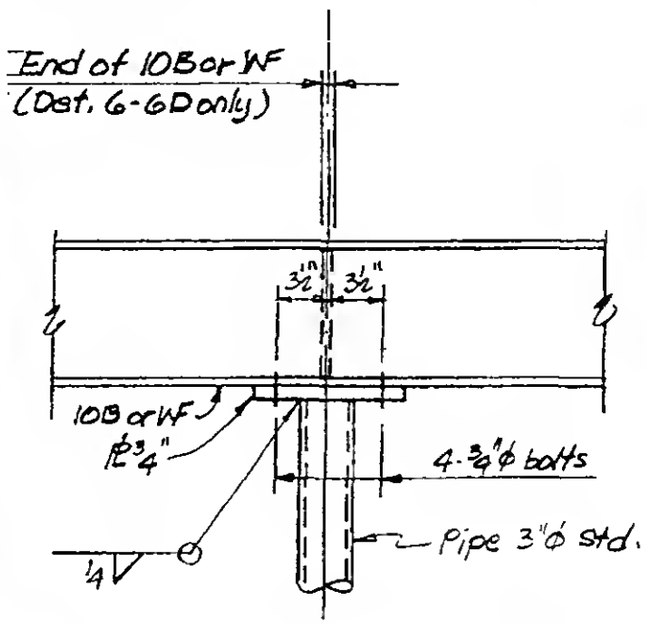

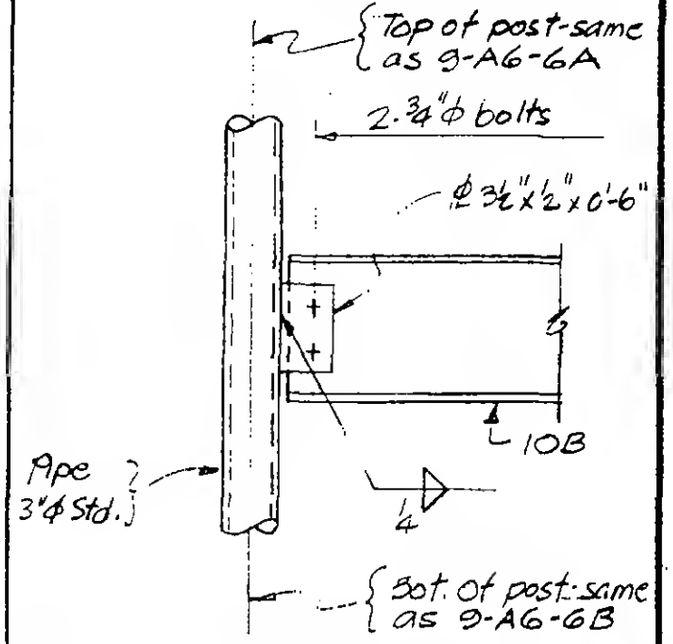

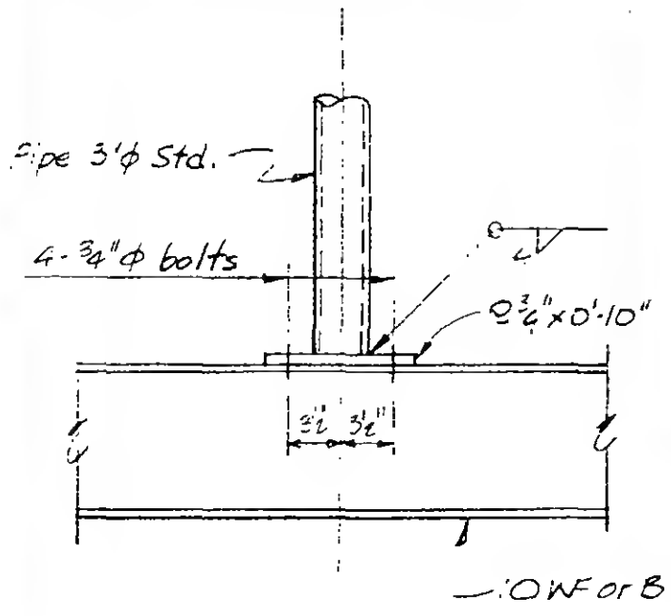

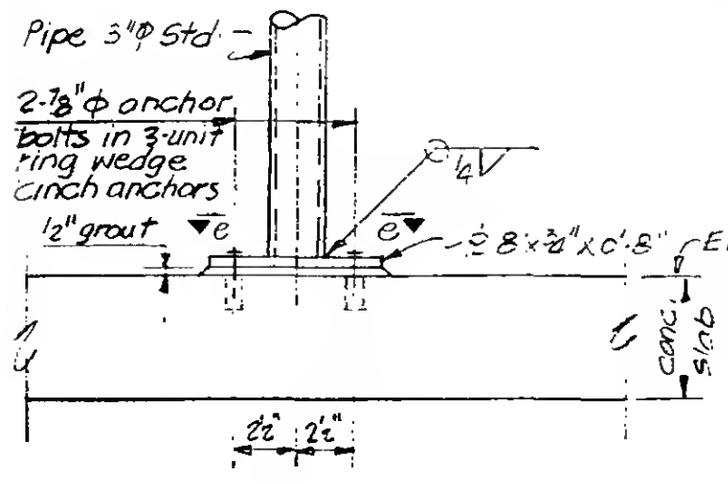

View looking north

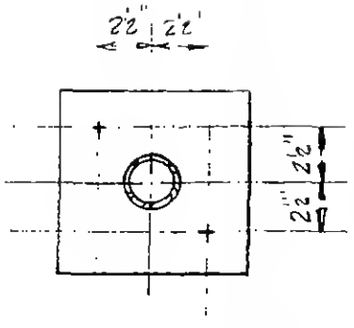

Section e-e

LICENSED PROFESSIONAL ENGINEER — LESLIE E. ROBERTSON — NO 34360 — UNIVERSITY OF THE STATE OF NEW YORK

SIGNED: TM

DRAWN:

REVIEWED:

9-AG-6