SKILLING, HELLE, CHRISTIANSEN, ROBERTSON — Structural & Civil Engineers

PROJECT: THE WORLD TRADE CENTER | TITLE: FLOOR 107-PH HORIZONTAL BRACING | DATE: 4-1-70

REVISIONS

5/27/70

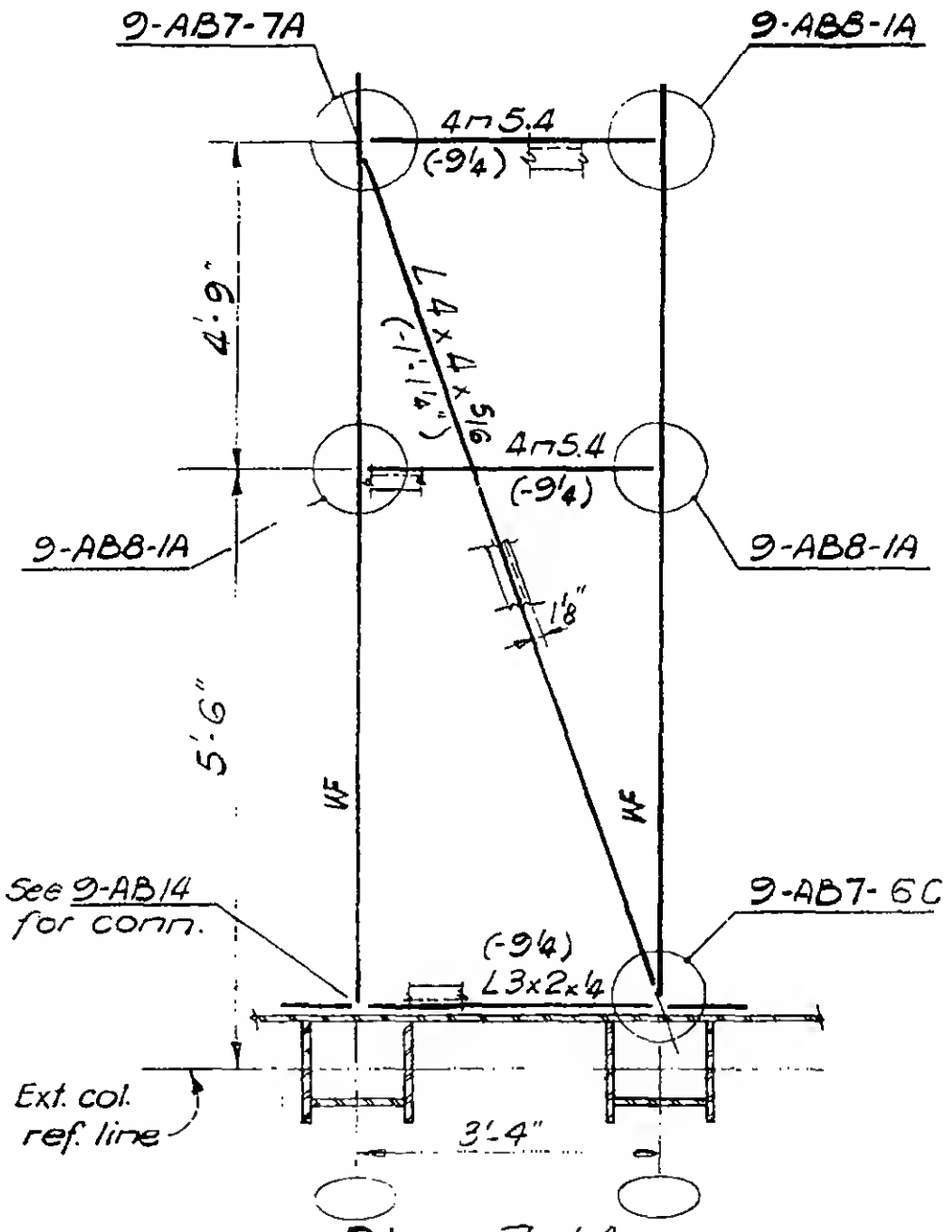

Plan 7-1A

Plan 7-1B Opp. hand

LICENSED PROFESSIONAL ENGINEER — LESLIE E ROBERTSON — No. 34360 — UNIVERSITY OF THE STATE OF NEW YORK

DESIGNED

DRAWN: M. Nichols

REVIEWED: C.J. [illegible]

9-AB7-1