SKILLING, HELLE, CHRISTIANSEN, ROBERTSON — Structural & Civil Engineers

PROJECT: THE WORLD TRADE CENTER | TITLE: FLOOR 107-PH HORIZONTAL BRACING | DATE: 4-1-70

REVISIONS

5/27/70

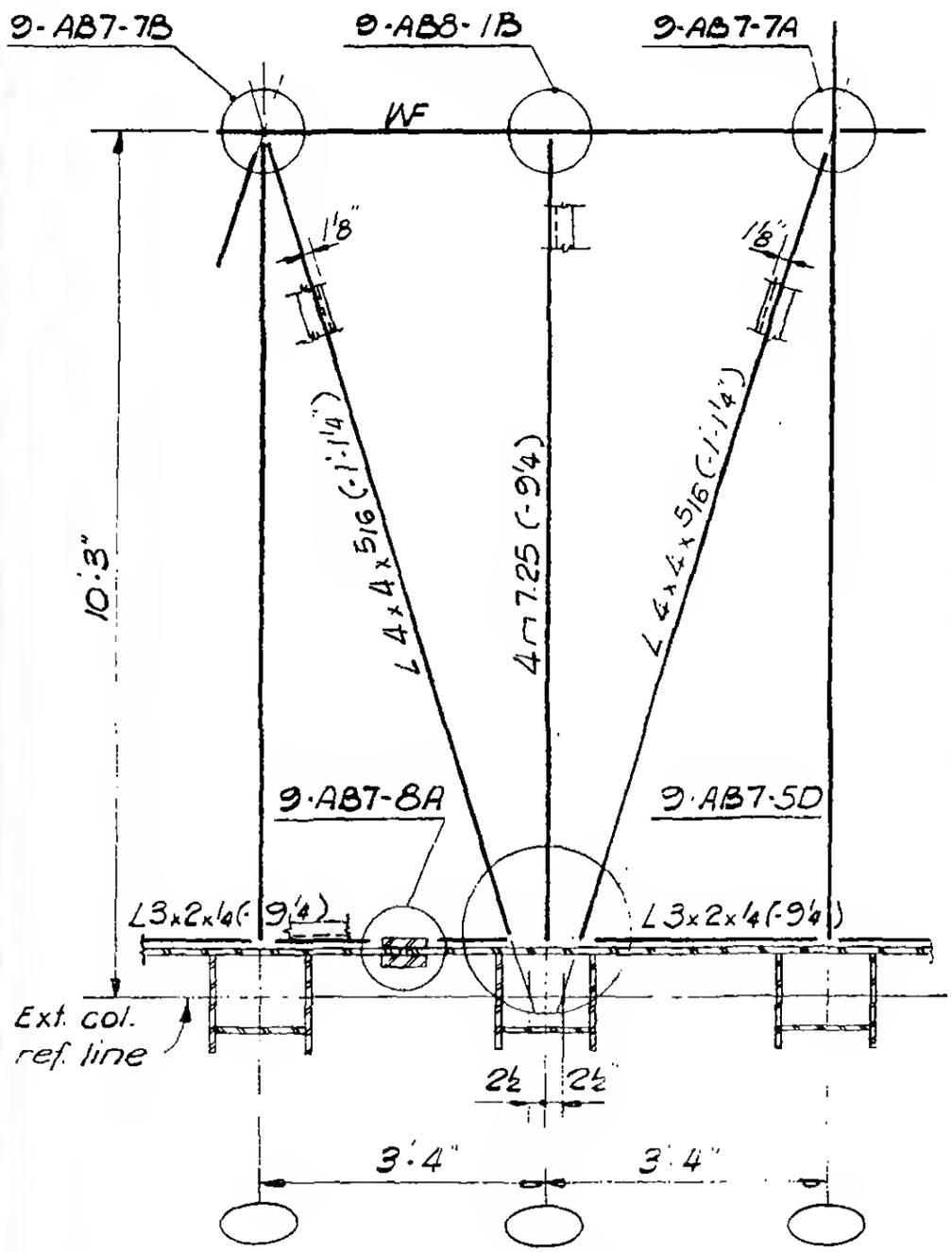

Plan 7-3G

Plan 7-3H opp. hand

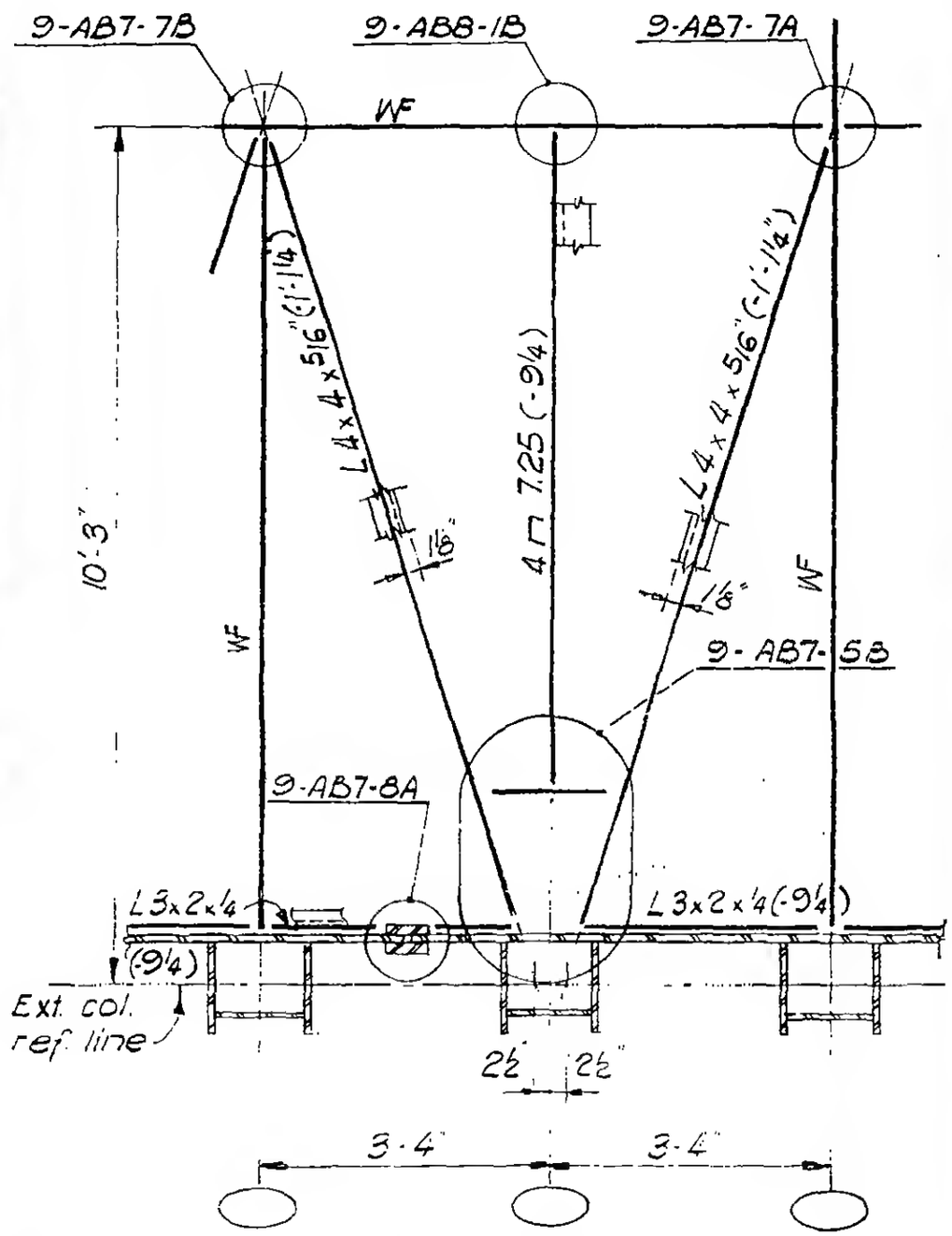

Plan 7-3E

Plan 7-3F opp. hand

LICENSED PROFESSIONAL ENGINEER — LESLIE E. ROBERTSON — No 34360 — UNIVERSITY OF THE STATE OF NEW YORK

DESIGNED

DRAWN M. Nichols

REVIEWED W. Brown

9-AB7-3