SKILLING, HELLE, CHRISTIANSEN, ROBERTSON — Structural & Civil Engineers

PROJECT THE WORLD TRADE CENTER | TITLE FLOOR 107-PH HORIZONTAL BRACING | DATE 4-1-70

REVISIONS

- 5/27/70

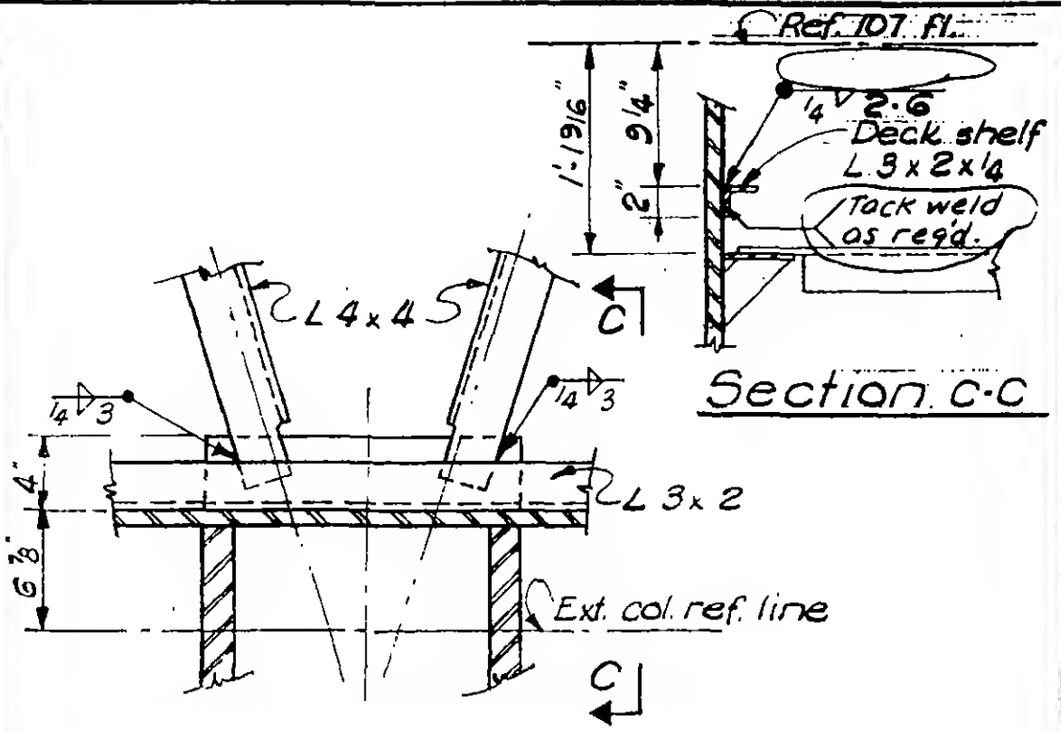

Detail 7-5A

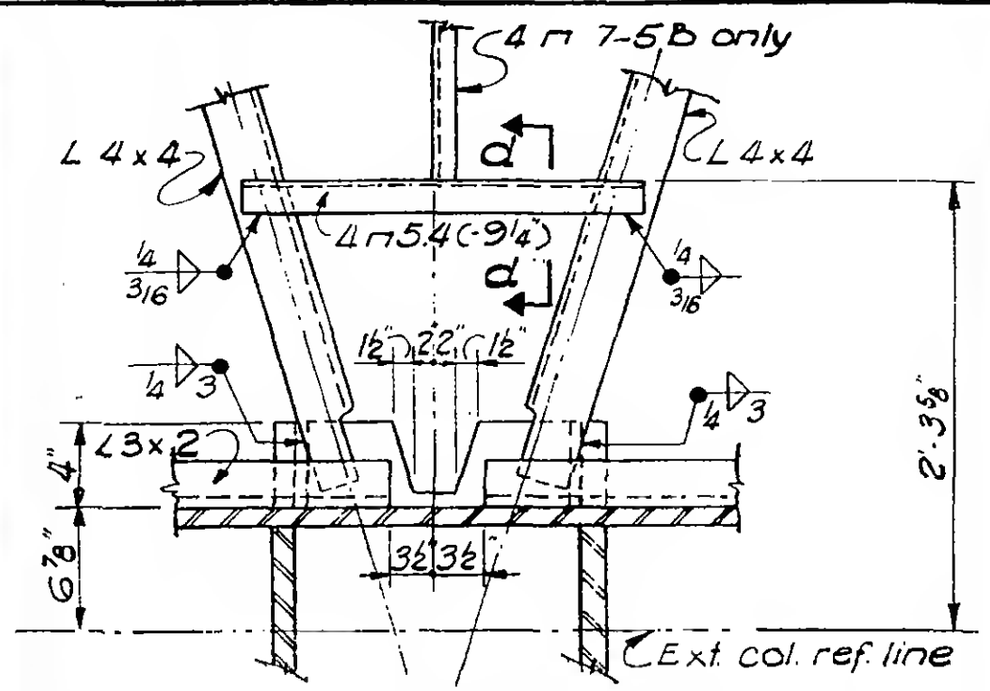

Detail 7-5B & 7-5C

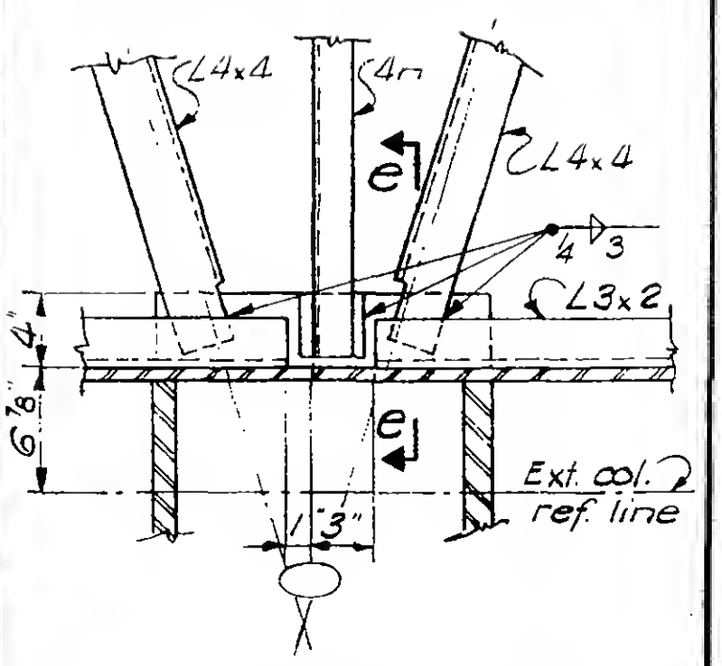

Detail 7-5D

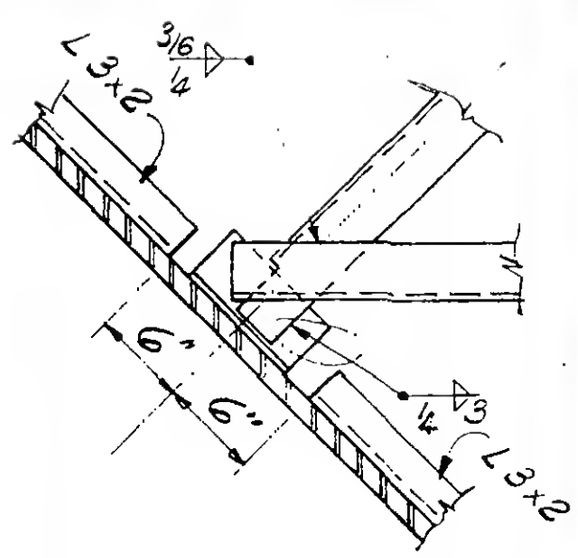

Detail 7-5E

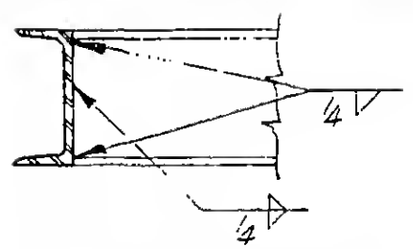

Section d-d
(7-5B only)

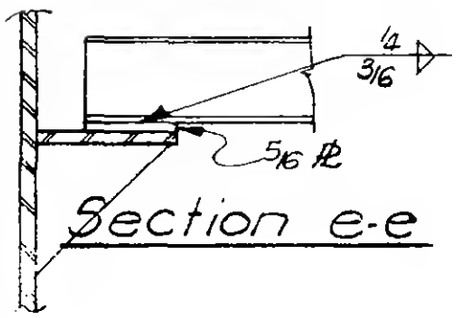

Section e-e

LICENSED PROFESSIONAL ENGINEER
LESLIE E. ROBERTSON
No 34360
UNIVERSITY OF THE STATE OF NEW YORK

CHKED

DRAWN M. Nichols

REVIEWED

9 - AB7 - 5