SKILLING, HELLE, CHRISTIANSEN, ROBERTSON — Structural & Civil Engineers

PROJECT THE WORLD TRADE CENTER | TITLE FLOOR 107 - PH HORIZONTAL BRACING | DATE 4-1-70

REVISIONS

5/27/70

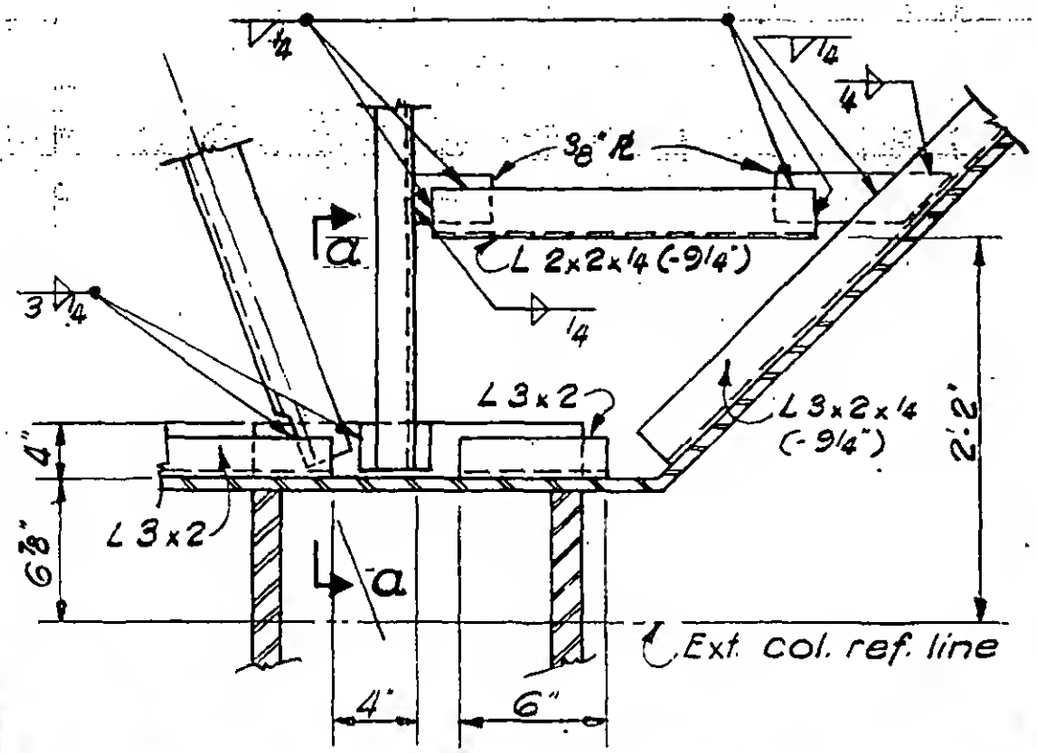

Detail 7-6A

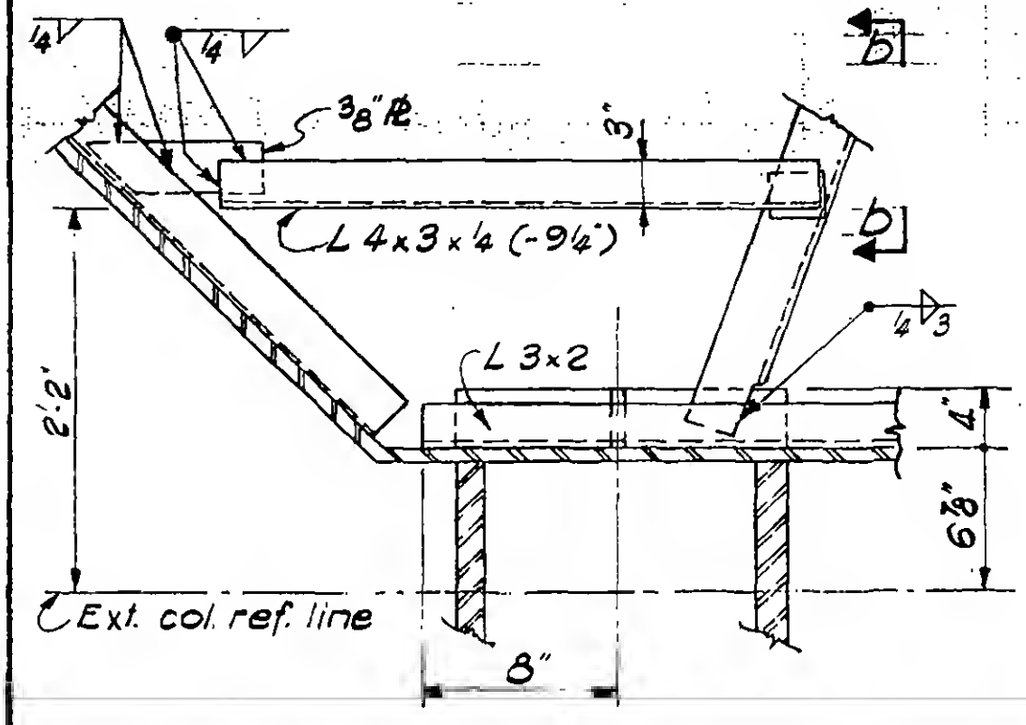

Detail 7-6B

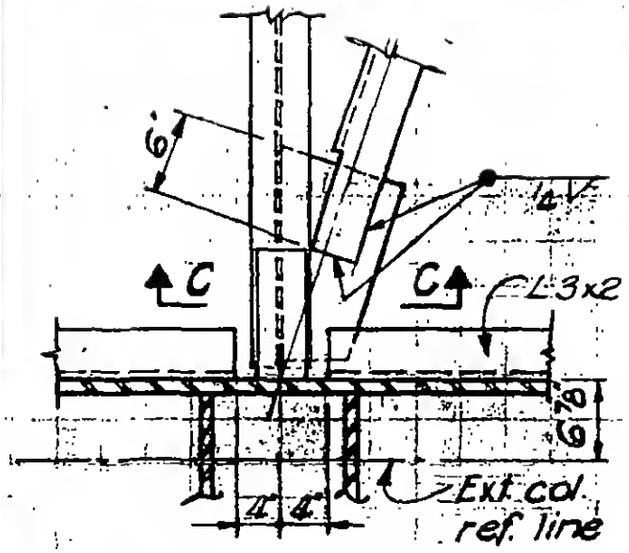

Detail 7-6C

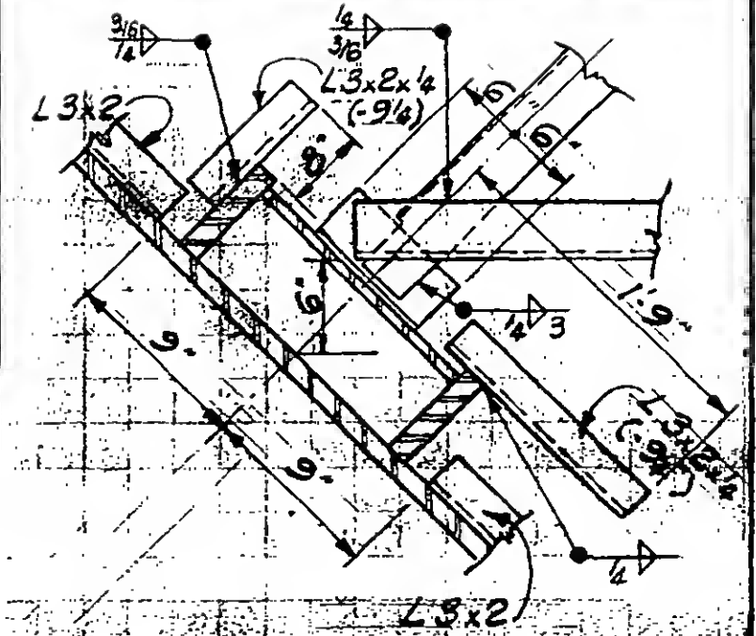

Detail 7-6D

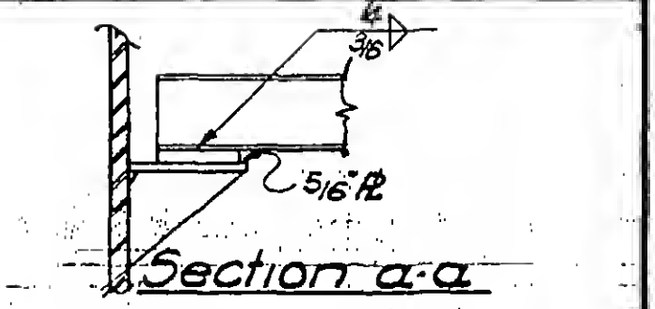

Section a-a

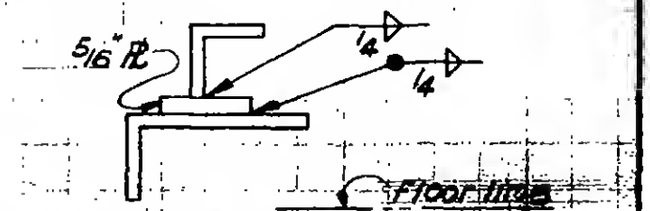

Section b-b

Section c-c

LICENSED PROFESSIONAL ENGINEER — LESLIE E. ROBERTSON — No. 34360 — UNIVERSITY OF THE STATE OF NEW YORK

DESIGNED

DRAWN M. Nichols

REVIEWED W. Brewer

9-A57-6