SKILLING, HELLE, CHRISTIANSEN, ROBERTSON — Structural & Civil Engineers

PROJECT THE WORLD TRADE CENTER | TITLE FLOOR 107-PH HORIZONTAL BRACING | DATE 8-3-70

REVISIONS

12/14/70

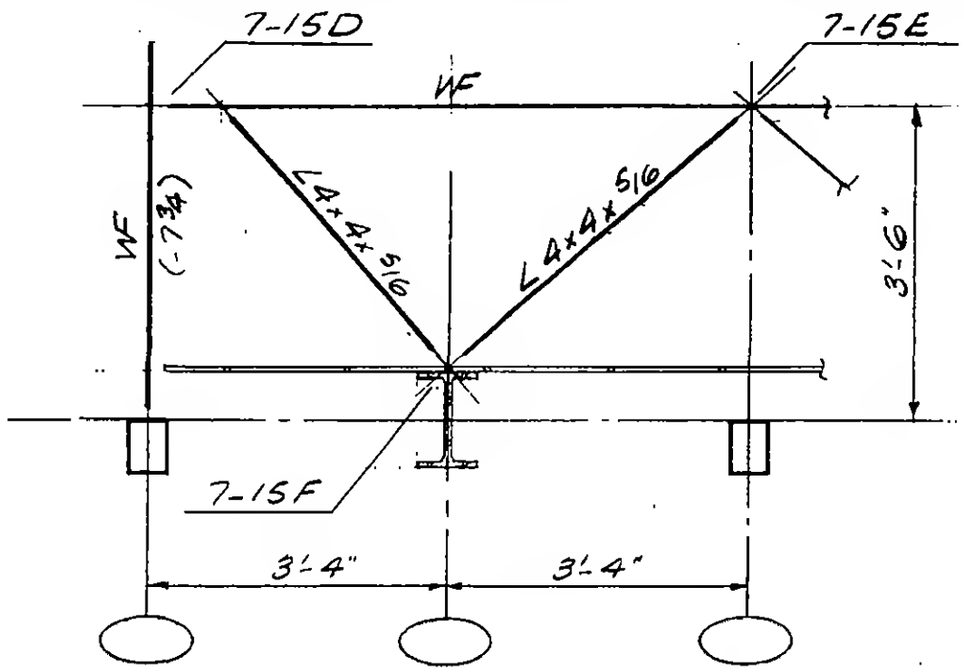

Plan 7-15A
Plan 7-15B opp hand

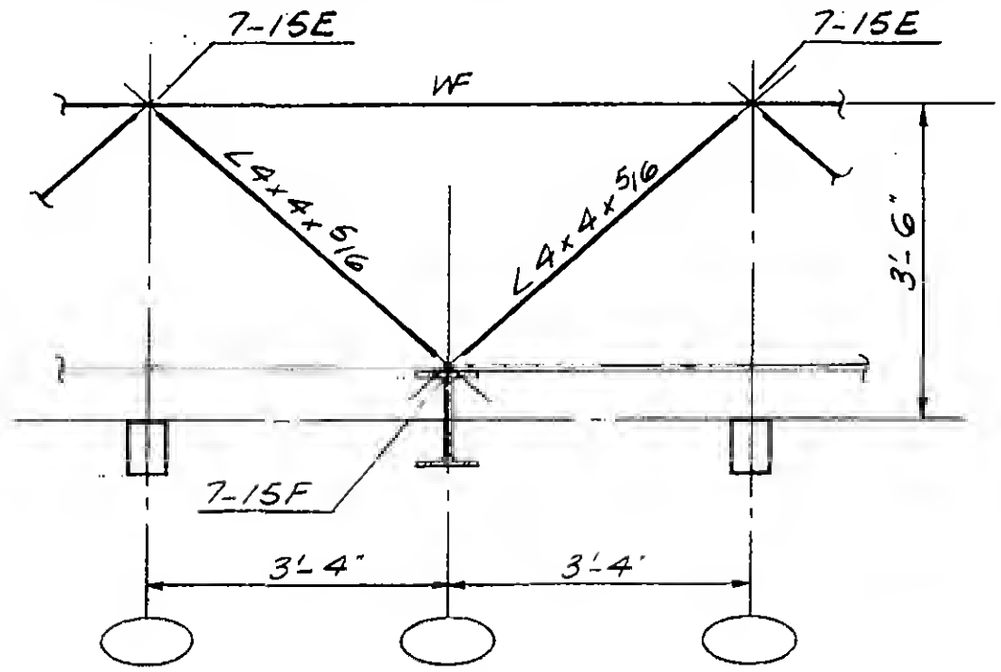

Plan 7-15C

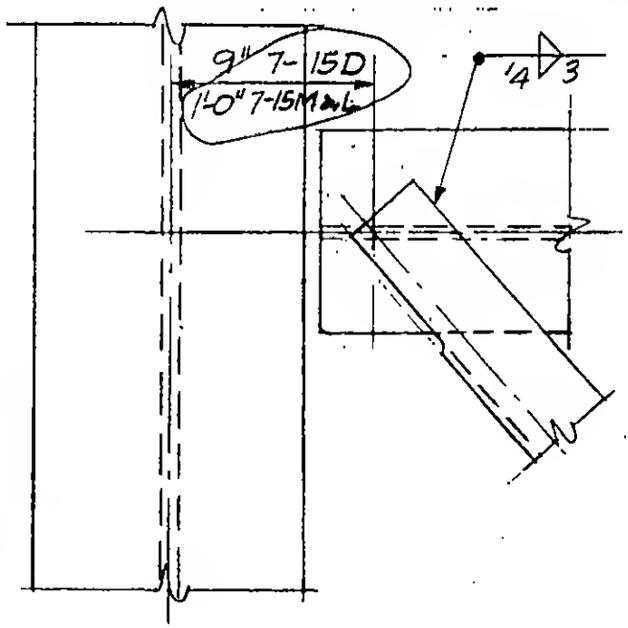

Detail 7-15D & 7-15L
Detail 7-15M, opp. hand

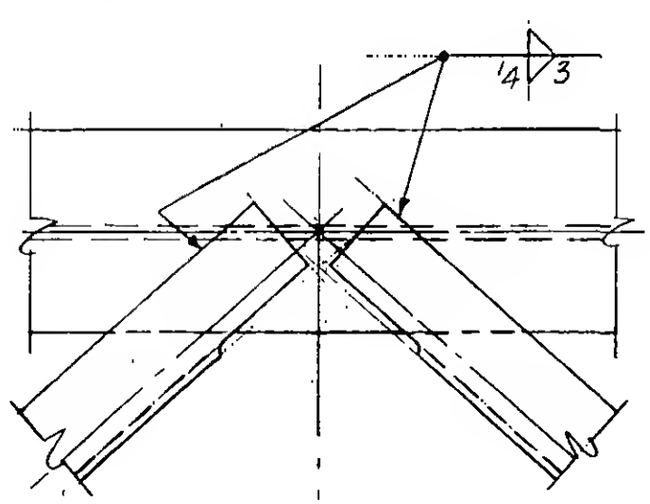

Detail 7-15E

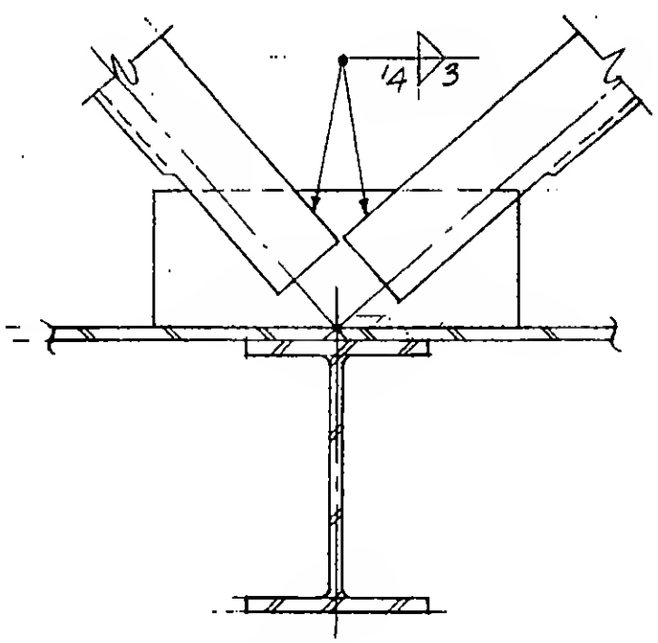

Detail 7-15F

LICENSED PROFESSIONAL ENGINEER
LESLIE E. ROBERTSON
No. 34360
UNIVERSITY OF THE STATE OF NEW YORK

DESIGNED

DRAWN A.FRANQUI

REVIEWED

9-B7-15.1