SKILLING HELLE CHRISTIANSEN, ROBERTSON — Structural & Civil Engineers

PROJECT THE WORLD TRADE CENTER | TITLE FL. 107-PH BRIDGING DETAILS | DATE 4-1[illegible]

VISIONS

6/15/70

7-15-70

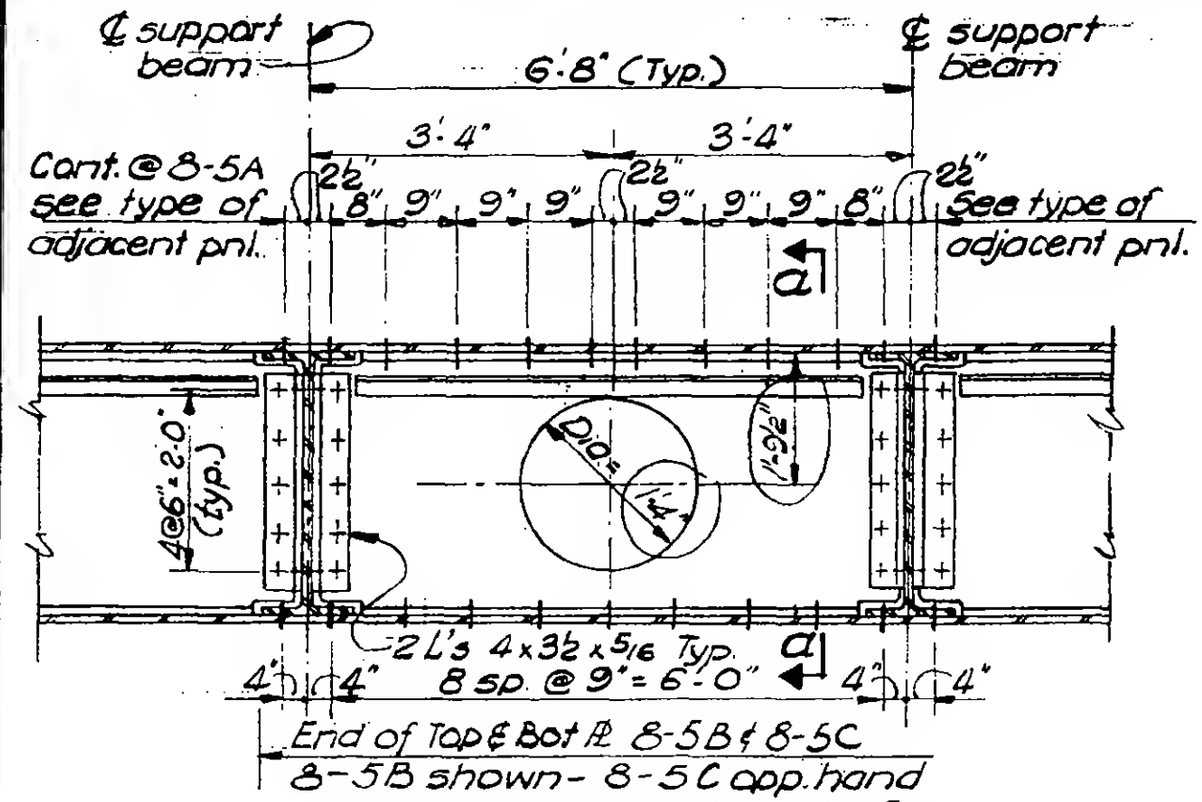

DETAILS 8-5A, 5B, 5C

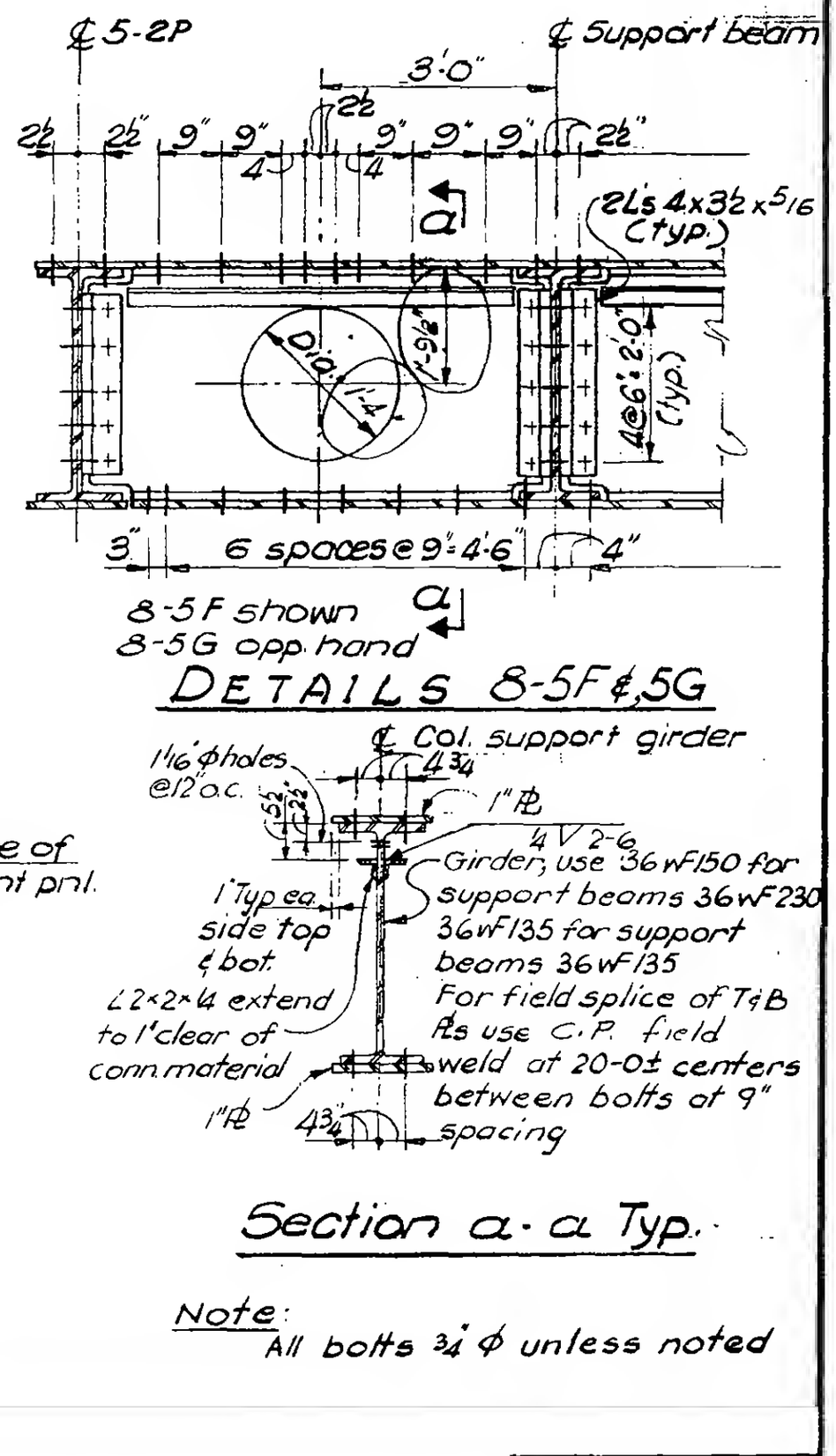

DETAILS 8-5F & 5G

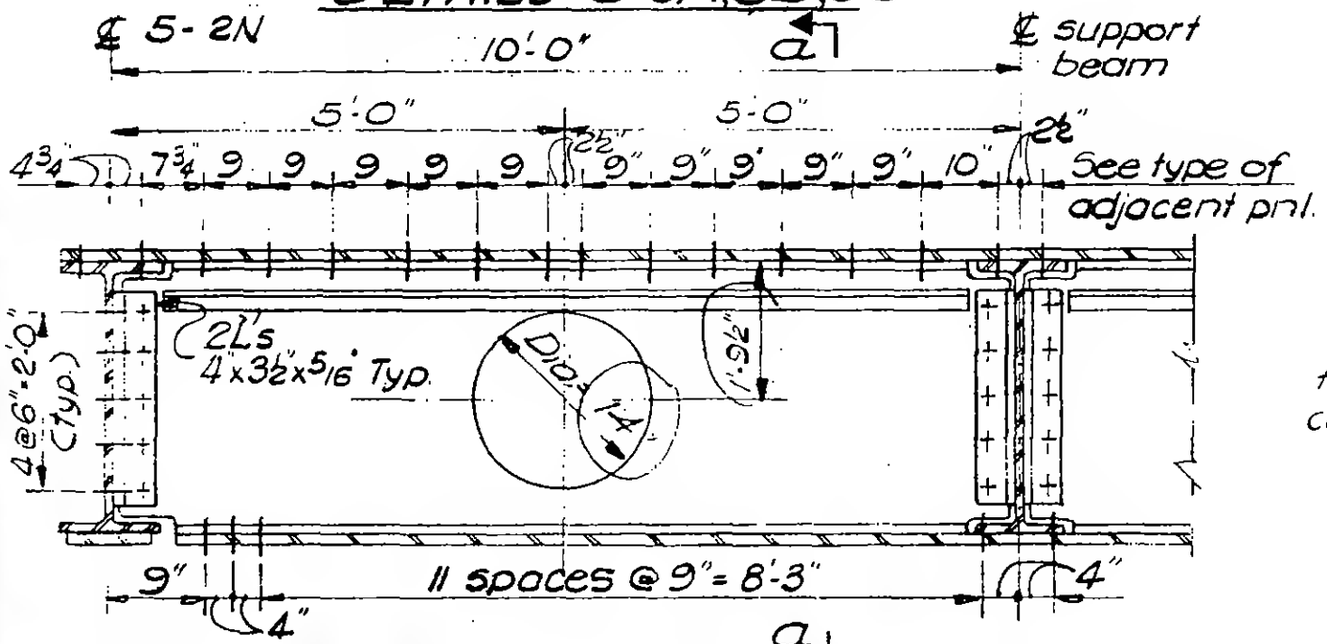

DETAILS 8-5D & 5E

Section a-a Typ.

Note:
All bolts ¾" ϕ unless noted

LICENSED PROFESSIONAL ENGINEER
LESLIE E. ROBERTSON
No 34360
UNIVERSITY OF THE STATE OF NEW YORK

DESIGNED

DRAWN M. Nichols

REVIEWED

9-AB8-5.1