SKILLING, HELLE, CHRISTIANSEN, ROBERTSON — Structural & Civil Engineers

PROJECT THE WORLD TRADE CENTER | TITLE FL. 107-PH LOUVER WALL SUPPORTS - DETAILS | DATE 4-1-70

REVISIONS

6/15/70 R

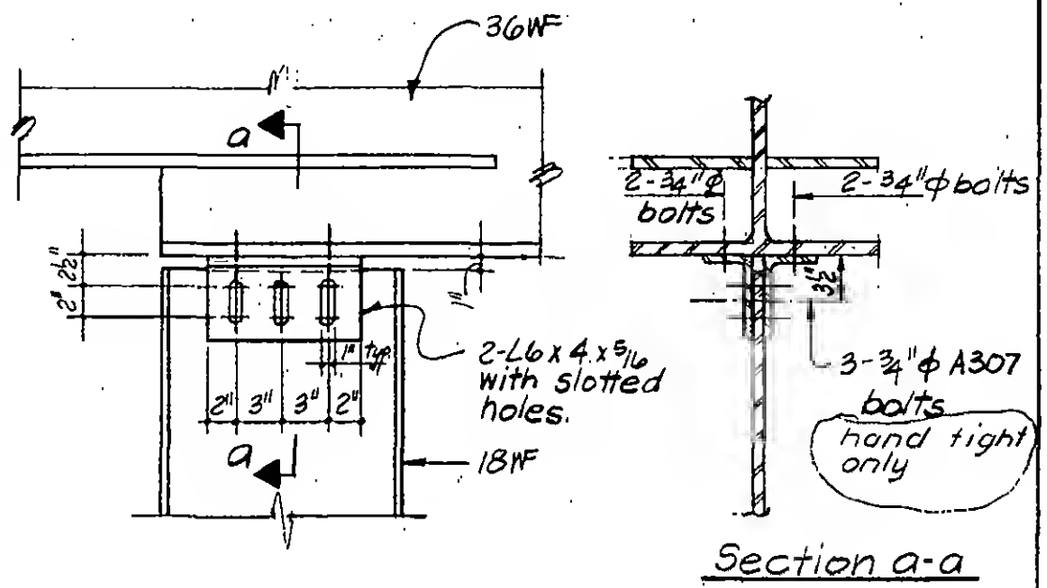

Section a-a

Detail 9-6A

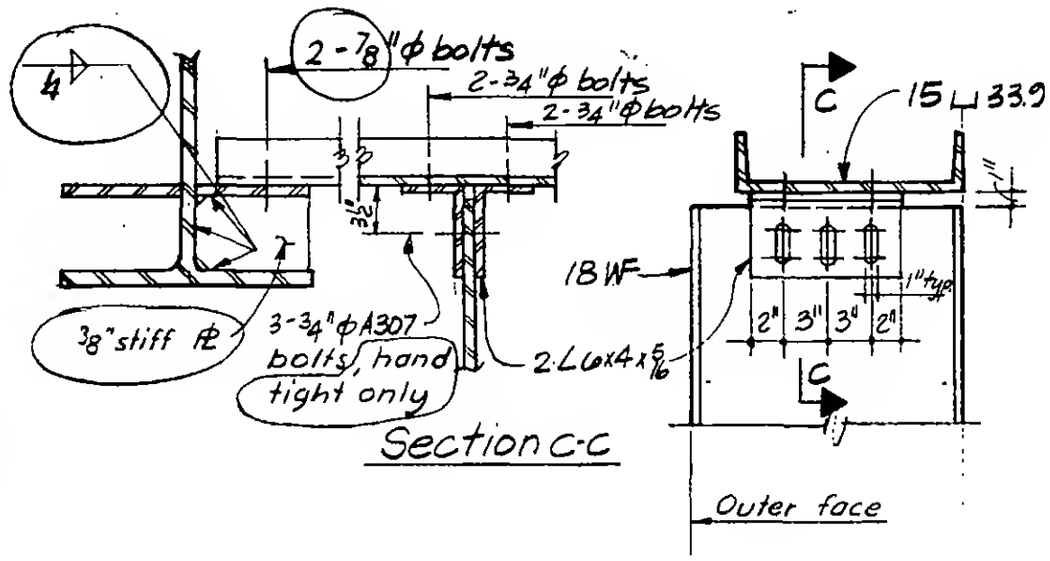

Section c-c

Detail 9-6C

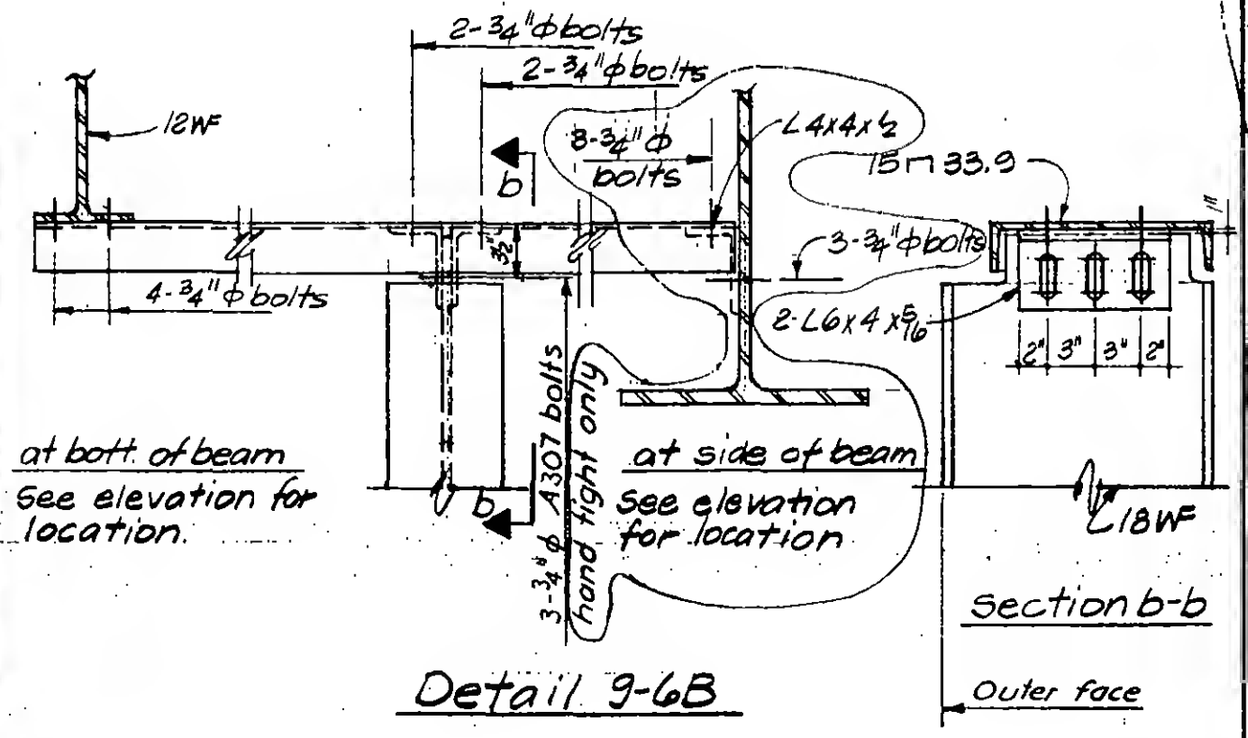

Section b-b

Outer face

Detail 9-6B

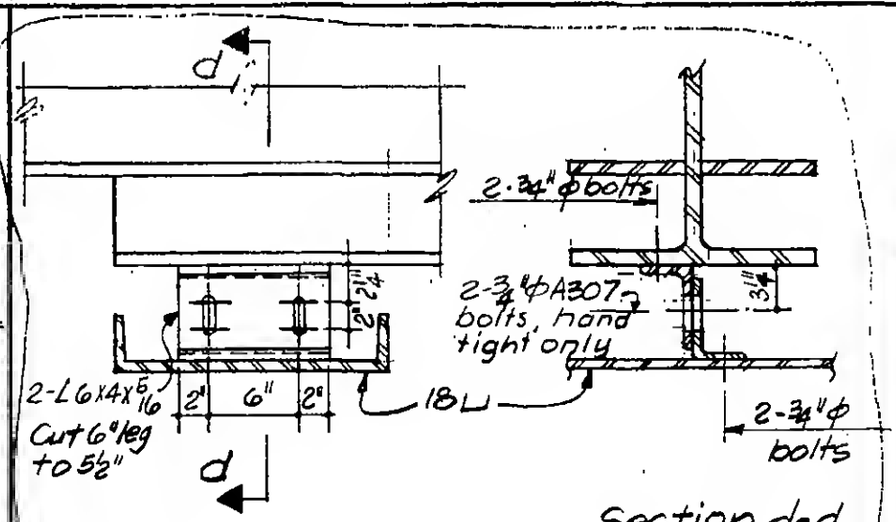

Section d-d

Detail 9-6D

LICENSED PROFESSIONAL ENGINEER LESLIE E. ROBERTSON No. 34360 UNIVERSITY OF THE STATE OF NEW YORK

DESIGNED

DRAWN P. Ozaki

REVIEWED

9-AB9-6