SKILLING, HELLE, CHRISTIANSEN, ROBERTSON — Structural & Civil Engineers

PROJECT THE WORLD TRADE CENTER | TITLE FL. 107-PH LOUVER WALL SUPPORTS - DETAILS | DATE 4-1-70

REVISIONS

6/15/70 R
7/8/70

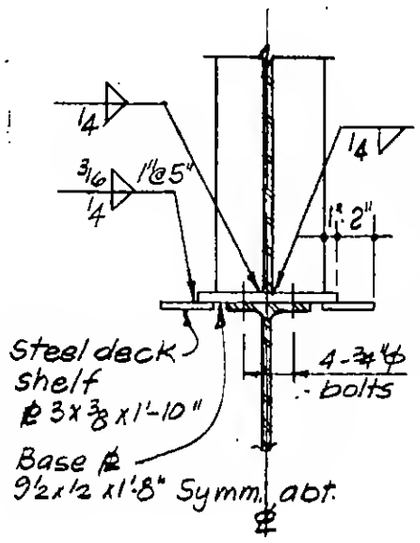


Detail 9-7A

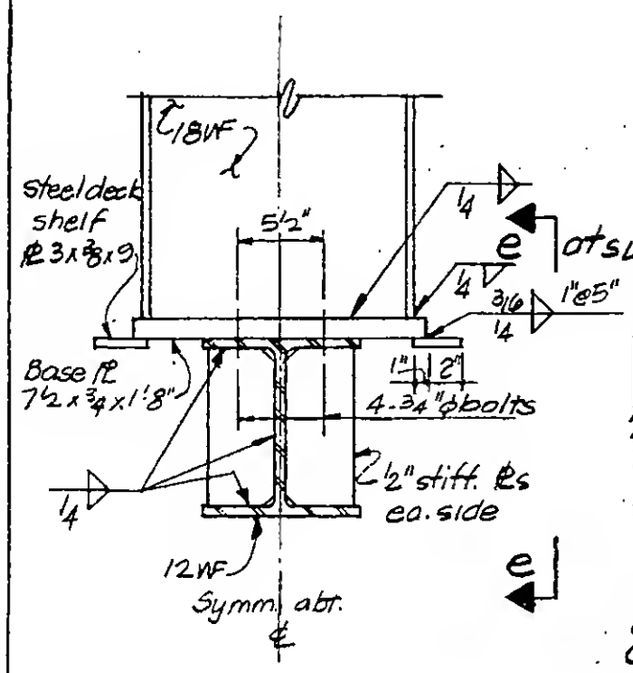


Detail 9-7B

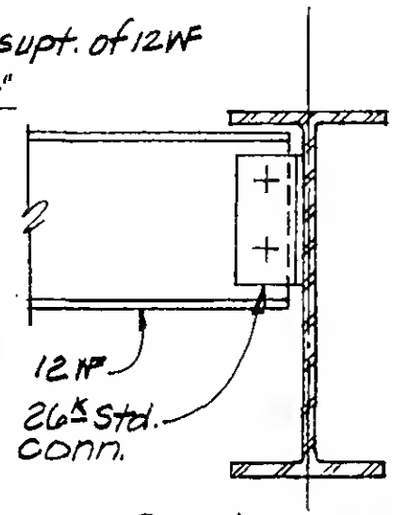


Section e-e

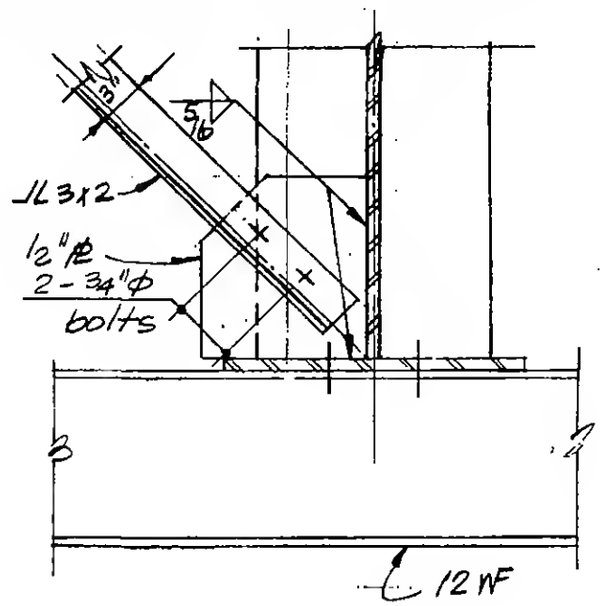


Detail 9-7C
For information not shown
See 9-7B

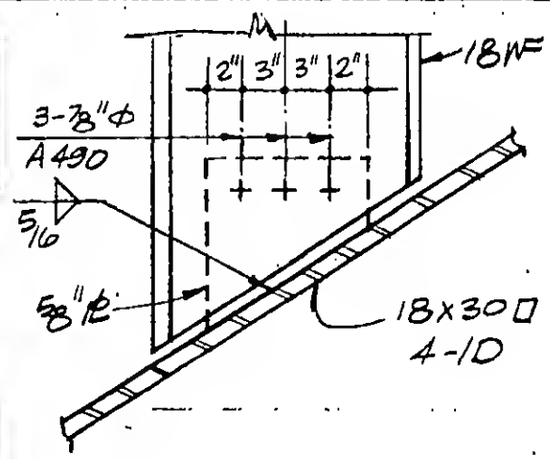


Section g-g

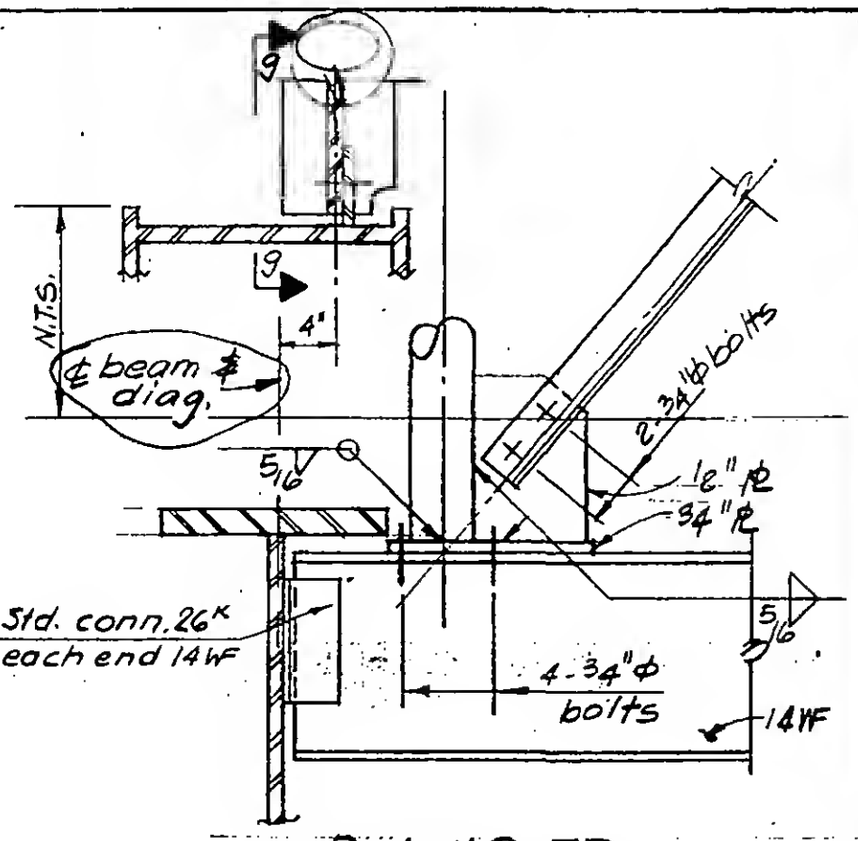


Detail 9-7D

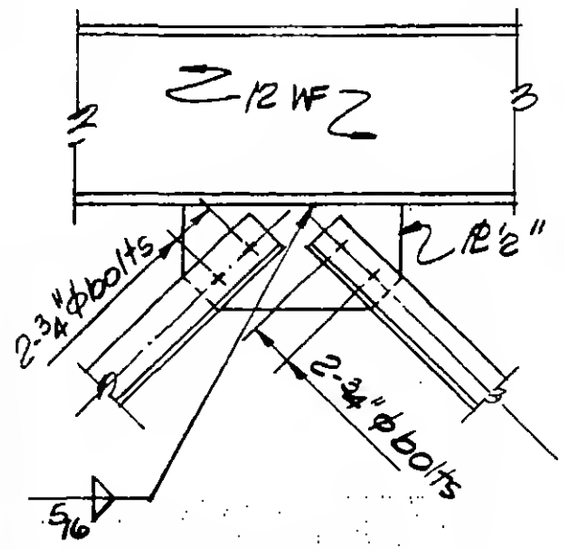


Detail 9-7E

LICENSED PROFESSIONAL ENGINEER
LESLIE E. ROBERTSON
No. 34360
UNIVERSITY OF THE STATE OF NEW YORK

DESIGNED

DRAWN P. Ozeki

REVIEWED

9-AB9-7