SKILLING, HELLE, CHRISTIANSEN, ROBERTSON — Structural & Civil Engineers

PROJECT THE WORLD TRADE CENTER | TITLE FL 107 - PH STRAP ANCHOR DETAILS | DATE 9-15-70

REVISIONS

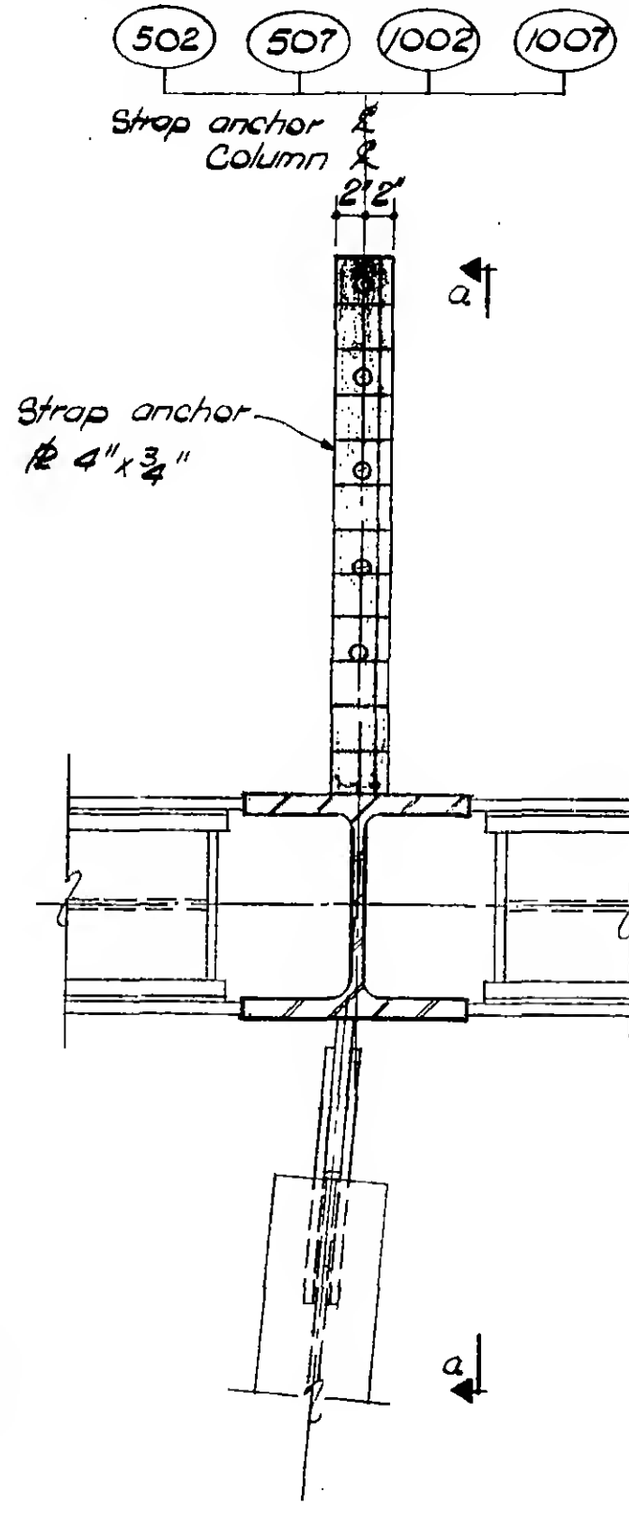

PLAN

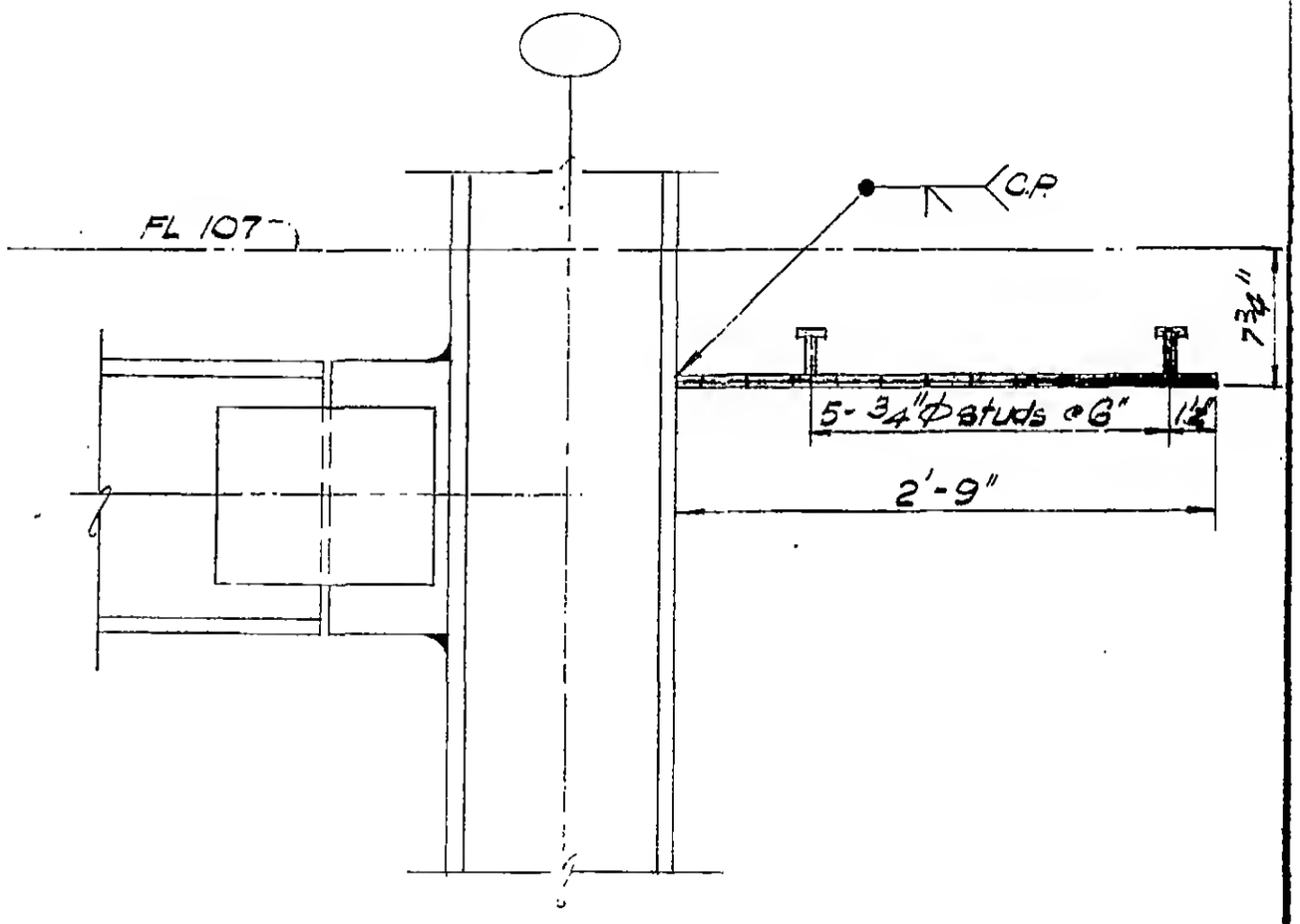

Section a-a

DETAIL 10-8

LICENSED PROFESSIONAL ENGINEER
LESLIE E. ROBERTSON
No. 34360
UNIVERSITY OF THE STATE OF NEW YORK

DESIGNED

DRAWN W. Clarke

REVIEWED

9-AB10-8