SKILLING, HELLE, CHRISTIANSEN, ROBERTSON — Structural & Civil Engineers

PROJECT: THE WORLD TRADE CENTER | TITLE: FL.107-PH. CONNECTION DETAILS-BEAM TO BEAM | DATE: 4-1-70

REVISIONS

5/27/70

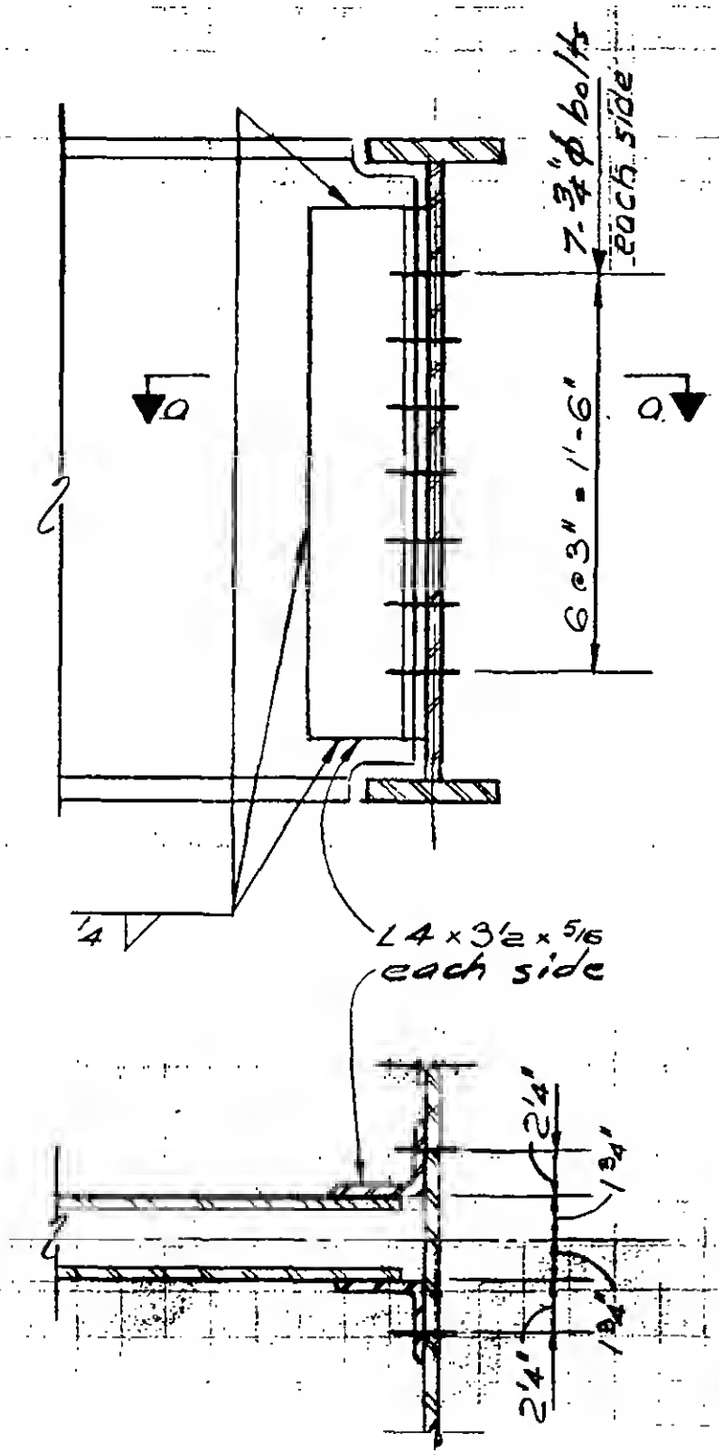

Section a-a

DETAIL 11-2A

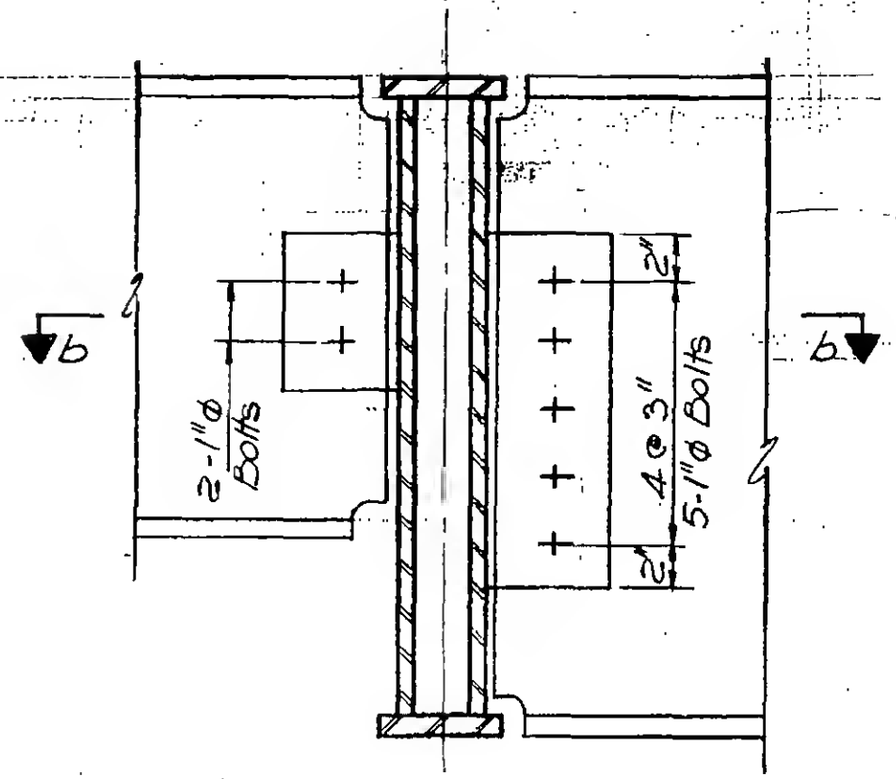

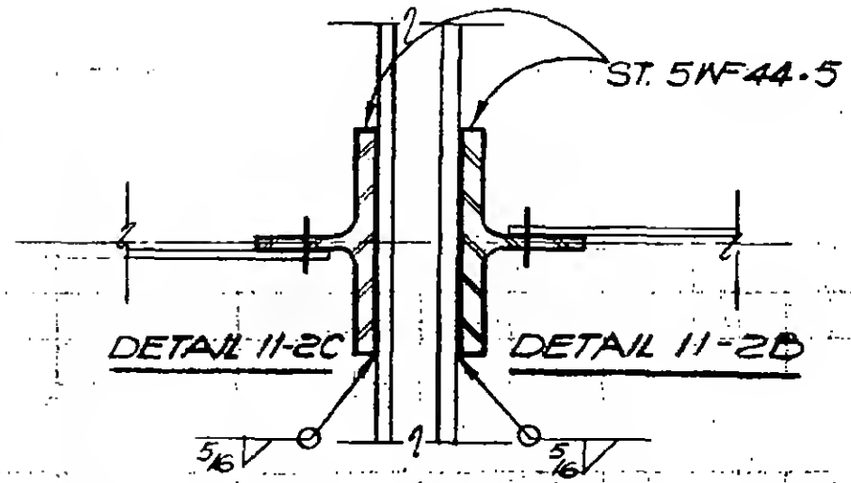

Section b-b

LICENSED PROFESSIONAL ENGINEER — LESLIE E. ROBERTSON — No. 34860 — UNIVERSITY OF THE STATE OF NEW YORK

DESIGNED

DRAWN: W. Clarke

REVIEWED

9-AB11-2