SKILLING, HELLE, CHRISTIANSEN, ROBERTSON — Structural & Civil Engineers

PROJECT: THE WORLD TRADE CENTER | TITLE: FL.107 - PH CONNECTION DETAILS FL. 107 | DATE: 6-17-70

REVISIONS

7/8/70

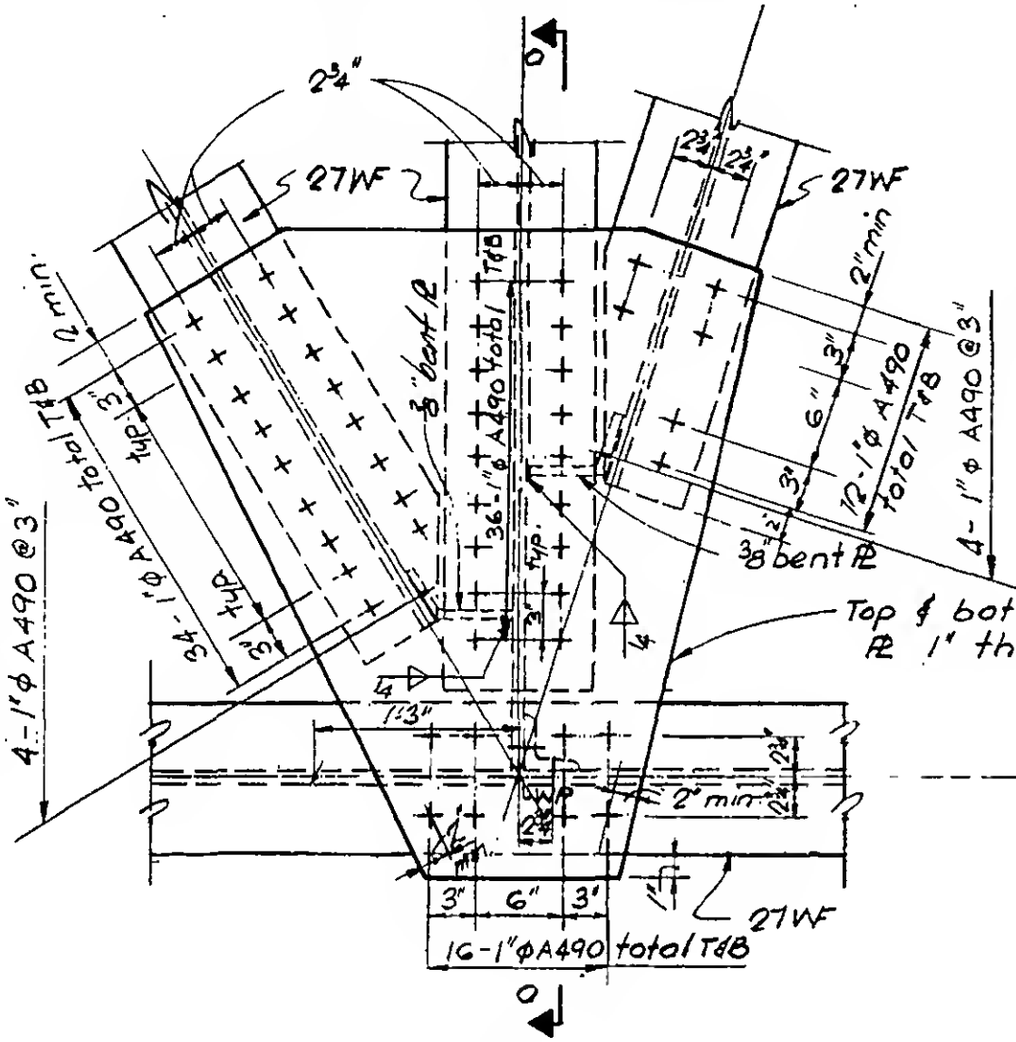


Detail 11-9A

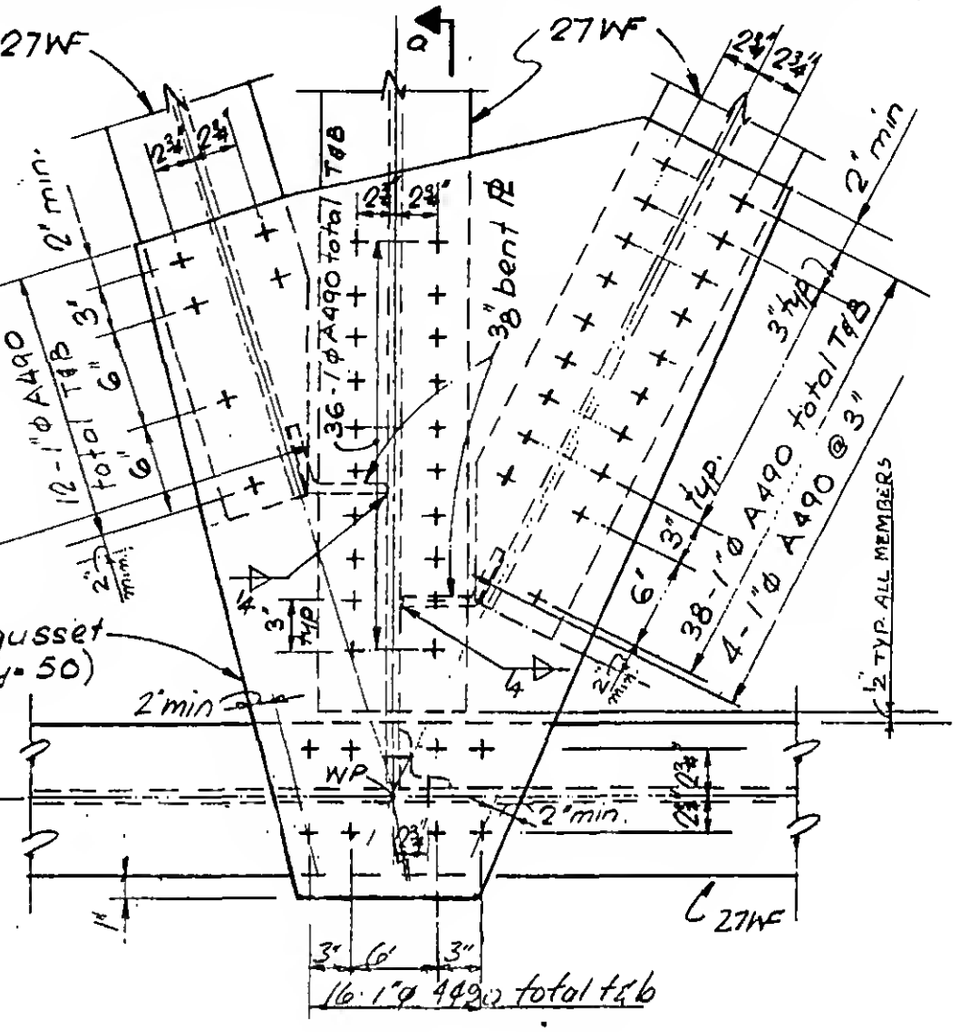


Detail 11-9B

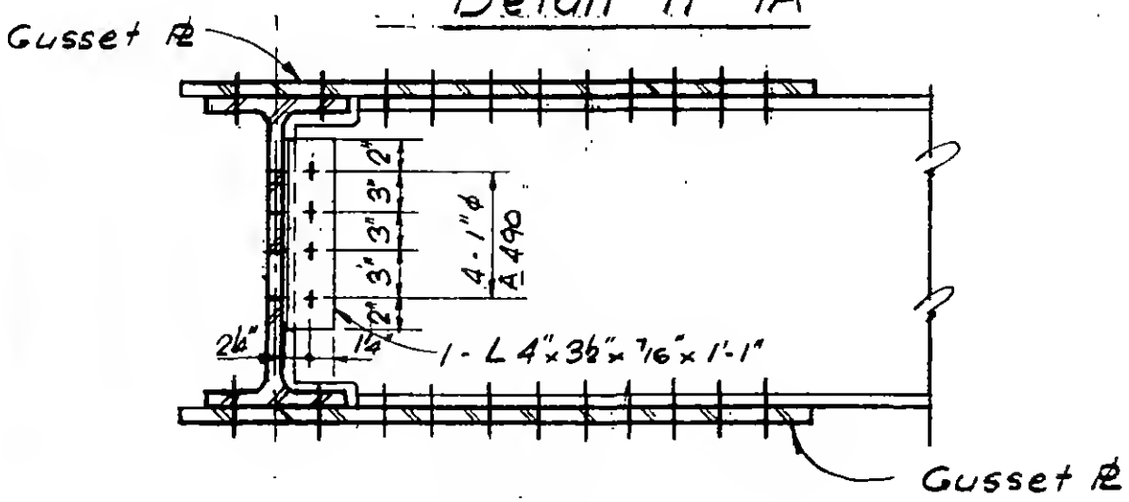


Section a-a

4/3/72
In Process

LICENSED PROFESSIONAL ENGINEER
LESLIE E. ROBERTSON
No. 34960
UNIVERSITY OF THE STATE OF NEW YORK

DESIGNED: M. Romani
DRAWN: T. Terrelonge
REVIEWED:

9-AB11-9.1