SKILLING, HELLE, CHRISTIANSEN, ROBERTSON — Structural & Civil Engineers

PROJECT THE WORLD TRADE CENTER | TITLE FL. 107-PH COLUMN BASE DETAILS | DATE 4-1-70

REVISIONS

6/15/70
12-14-70

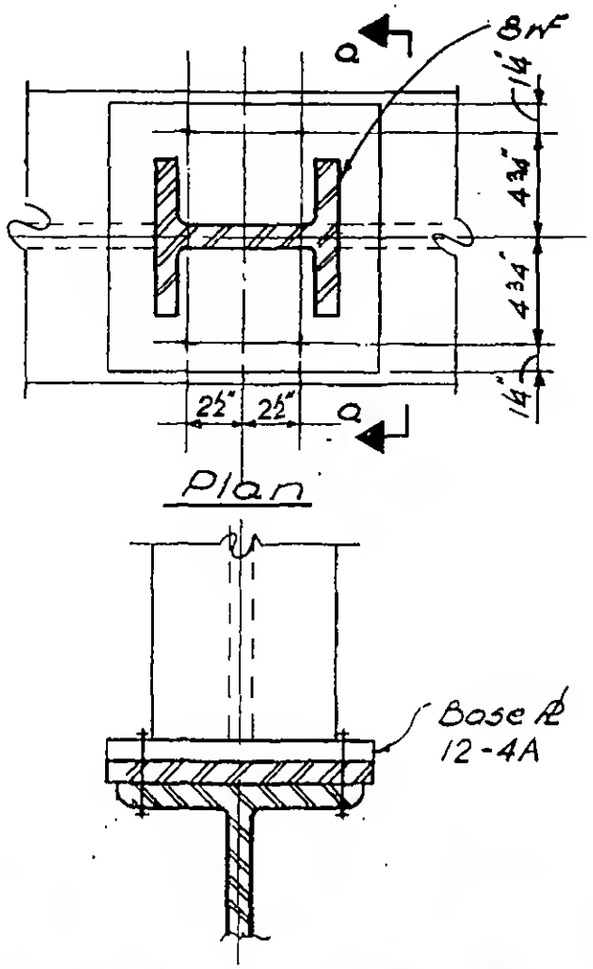

Section a-a
DETAIL 12-3A

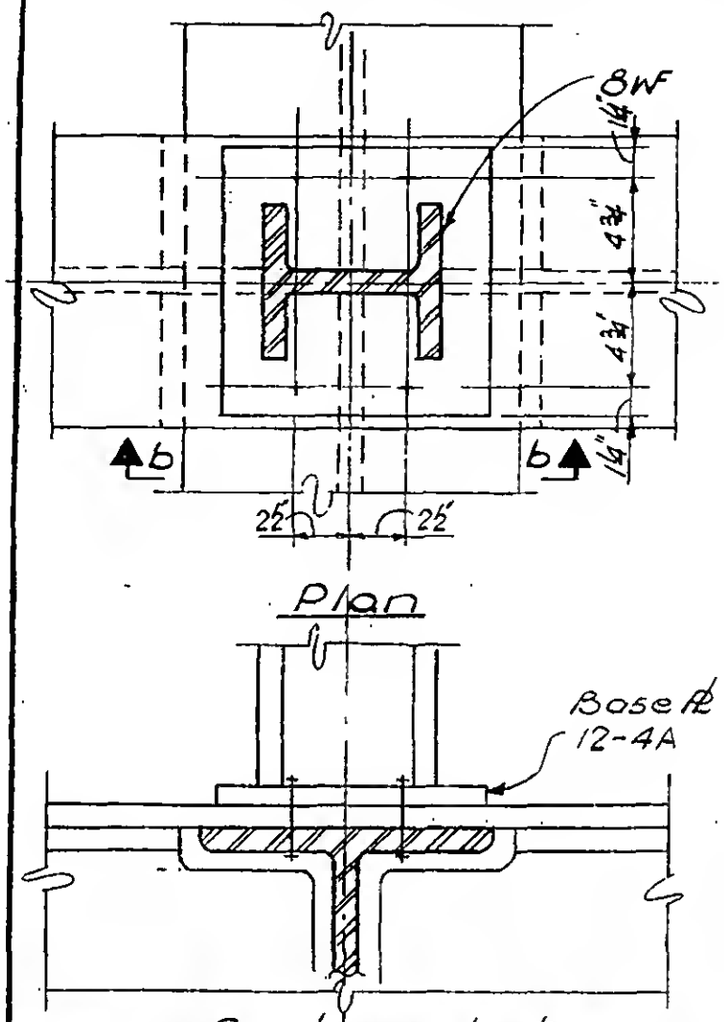

Section b-b
DETAIL 12-3B

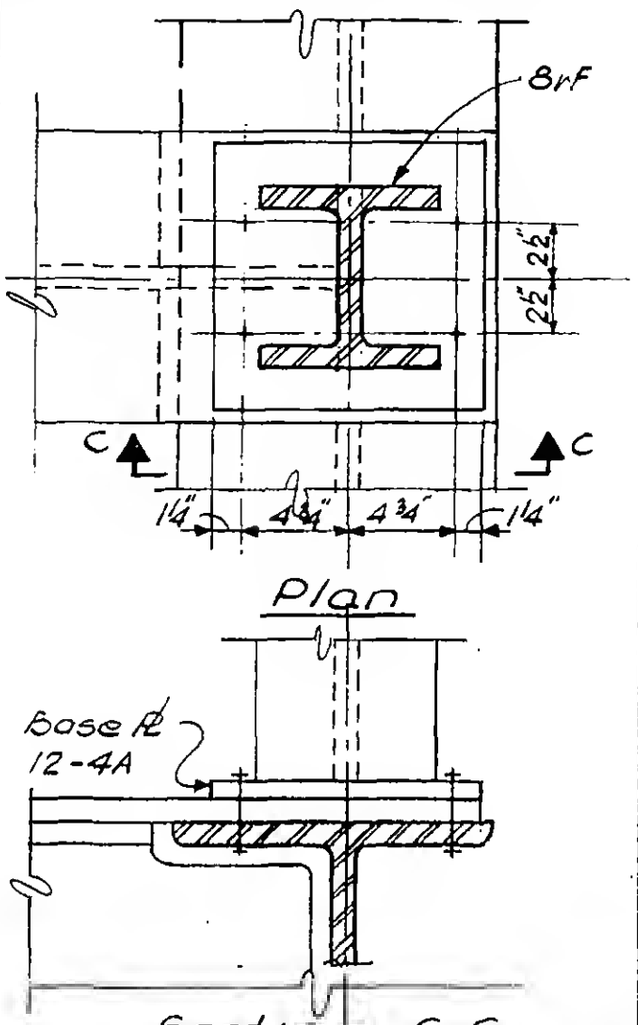

Section C-C
DETAIL 12-3C

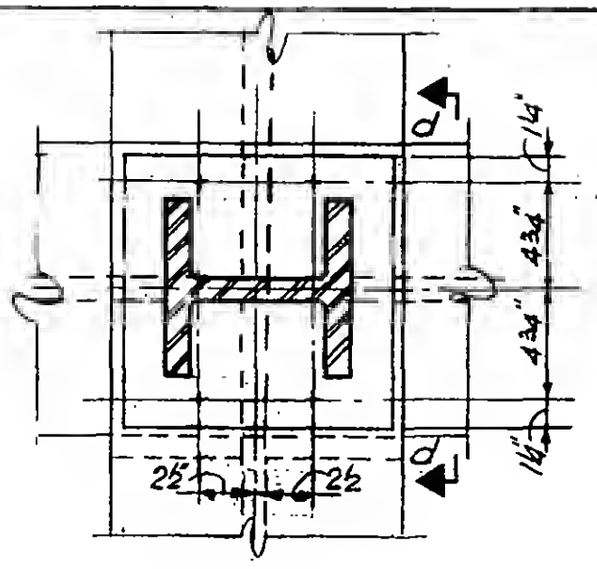

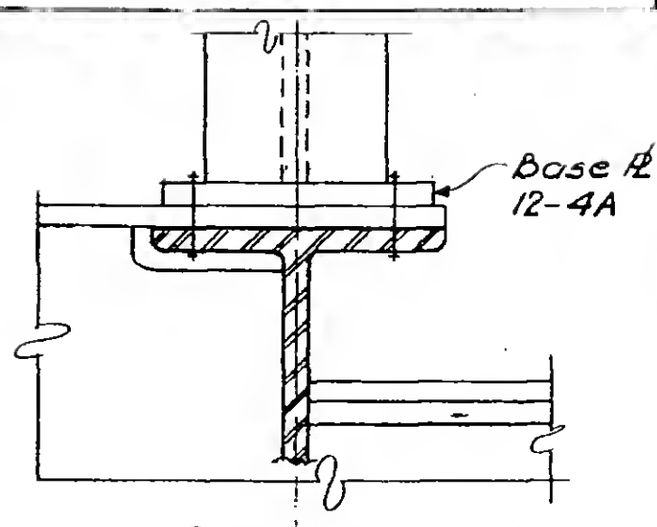

Section d-d
DETAIL 12-3D

Notes:
1. For bolts see 8-5

LICENSED PROFESSIONAL ENGINEER
LESLIE E. ROBERTSON
No. 34360
UNIVERSITY OF THE STATE OF NEW YORK

DESIGNED

DRAWN
D. Huggins

REVIEWED

9-AB12-3.1