SKILLING HELLE CHRISTIANSEN ROBERTSON

PROJECT THE WORLD TRADE CENTER | FL. 107 - PH CONNECTION DETAILS - FL 107 | DATE 4-1-70

REVISIONS

5/27/70

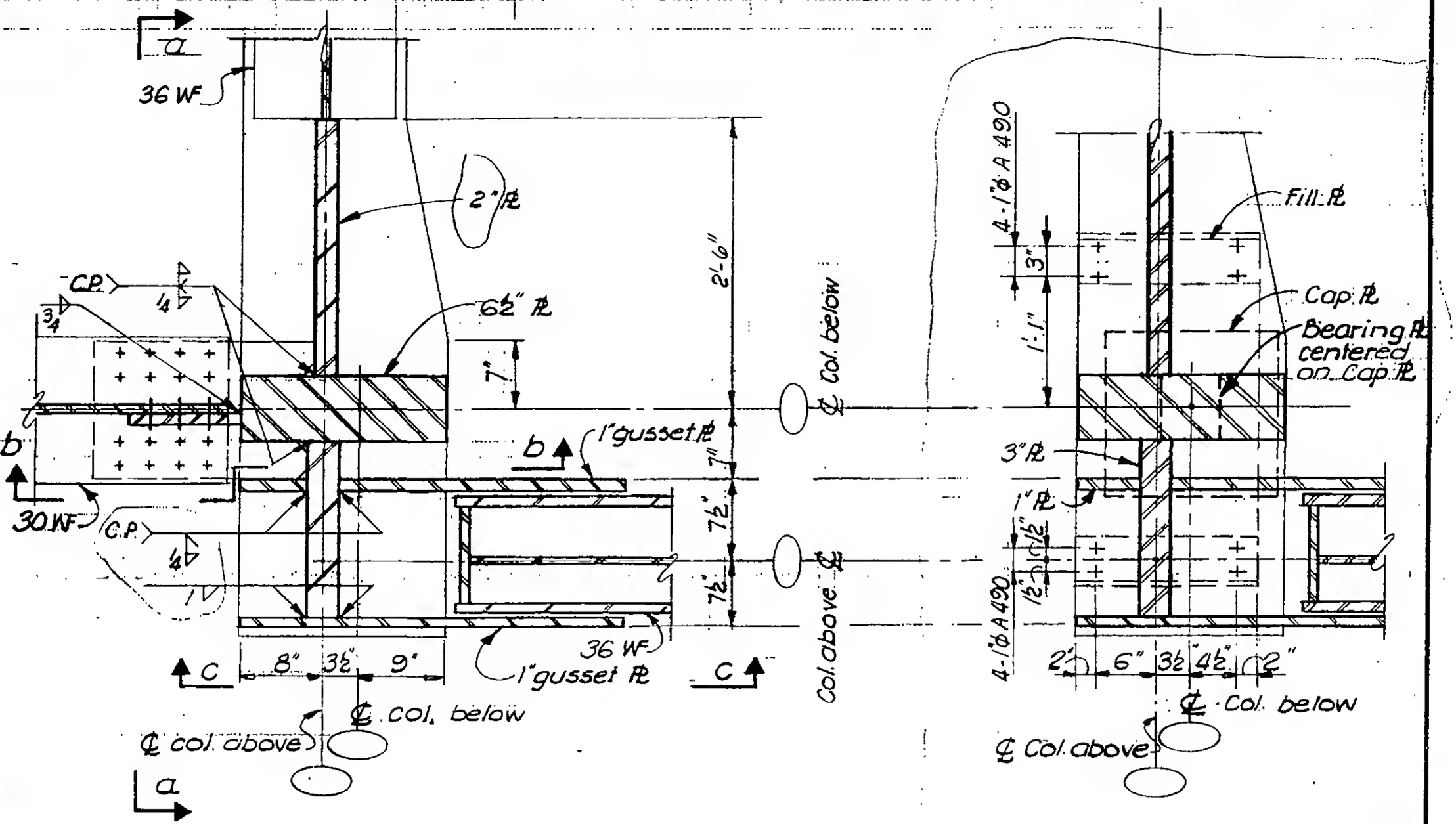

Plan A-A

Plan B-B

Detail 13-7A

Col. 1001 as shown

Col.'s 501, 508 & 1008 similar

Notes:
1.– All PL's and detail material on this detail consist of Fy = 50 ksi material.
2.– All PL's designated as gusset PL's shall have holes 3/16" larger than nominal bolt diameter, for all remaining PL's and members shall be 1/16" larger

LICENSED PROFESSIONAL ENGINEER LESLIE E. ROBERTSON No. 34360 UNIVERSITY OF THE STATE OF NEW YORK

DESIGNED J. Von

DRAWN J. Gricius

REVIEWED C. Drakos

9-AB13-7.1