SKILLING, HELLE, CHRISTIANSEN, ROBERTSON — Structural & Civil Engineers

PROJECT: THE WORLD TRADE CENTER | TITLE: FL. 107 - PH. CONNECTION DETAIL - FLOOR 107 | DATE: 4-1-70

REVISIONS

5/27/70

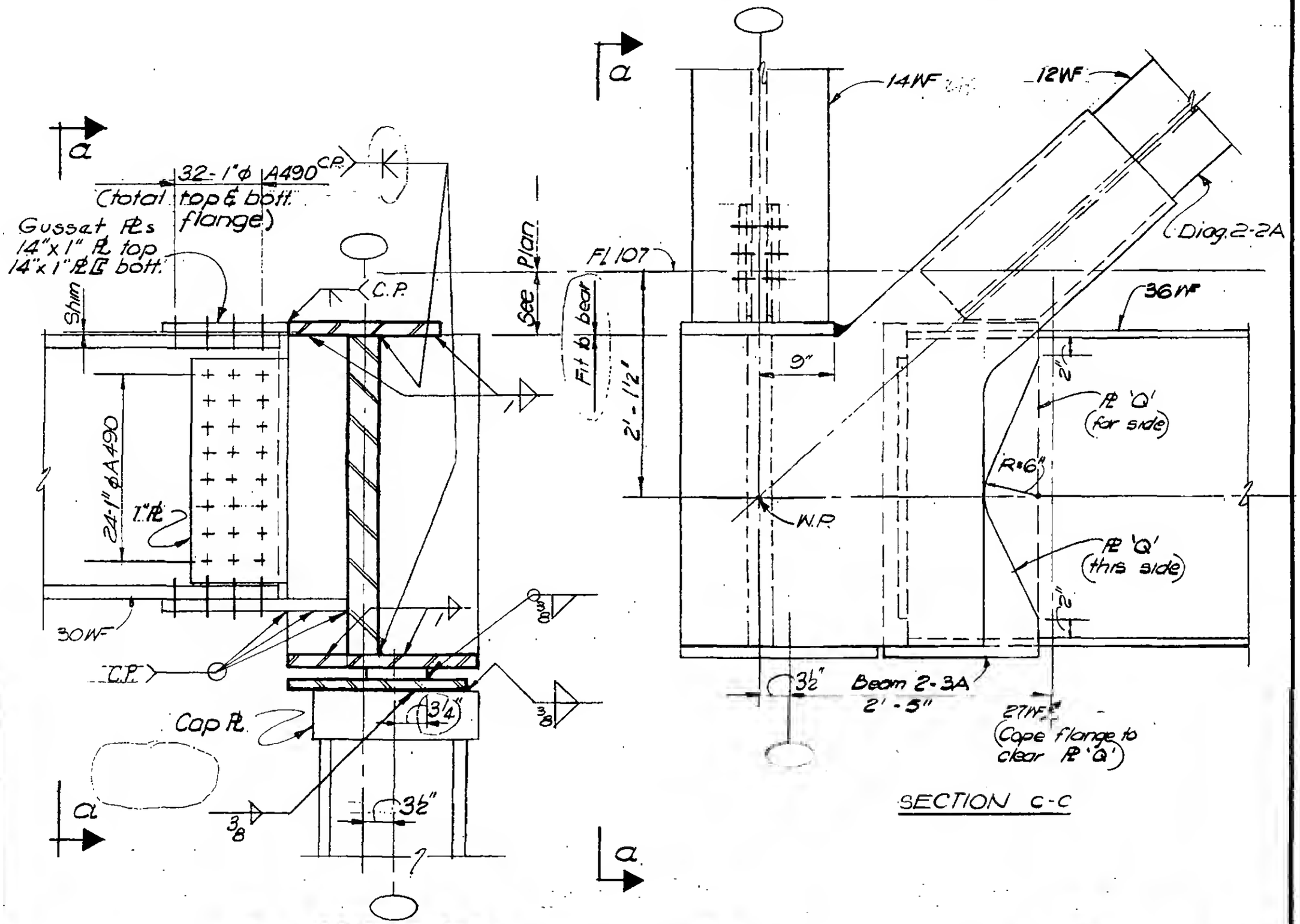

SECTION b-b

SECTION c-c

LICENSED PROFESSIONAL ENGINEER
LESLIE E. ROBERTSON
No. 34360
UNIVERSITY OF THE STATE OF NEW YORK

DESIGNED: H. Von

DRAWN: W. Clarke

REVIEWED: E. Drakos

9-AB13-7-3