SKILLING, HELLE, CHRISTIANSEN, ROBERTSON — Structural & Civil Engineers

PROJECT: THE WORLD TRADE CENTER

TITLE: FL 107 - PH CONNECTION DETAILS - FL 107

DATE: 4-1-70

REVISIONS

5/27/70

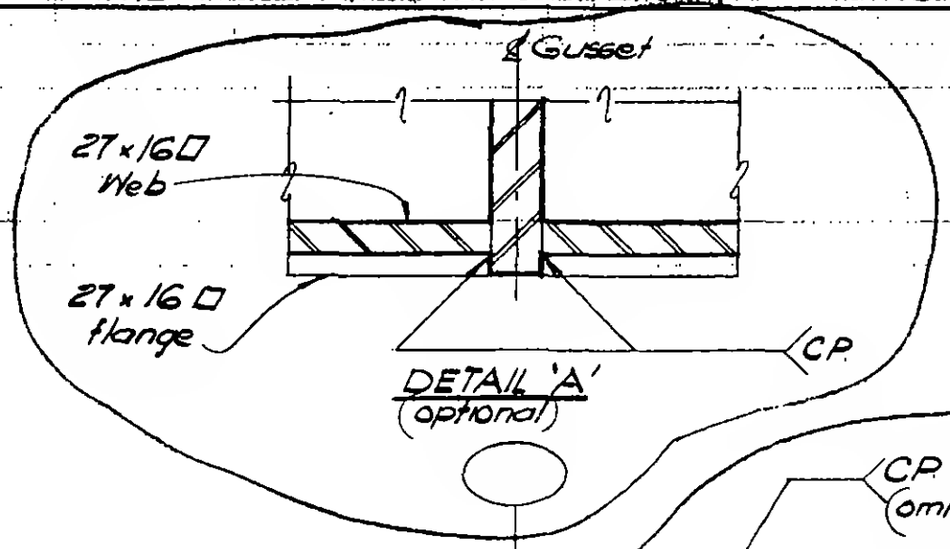

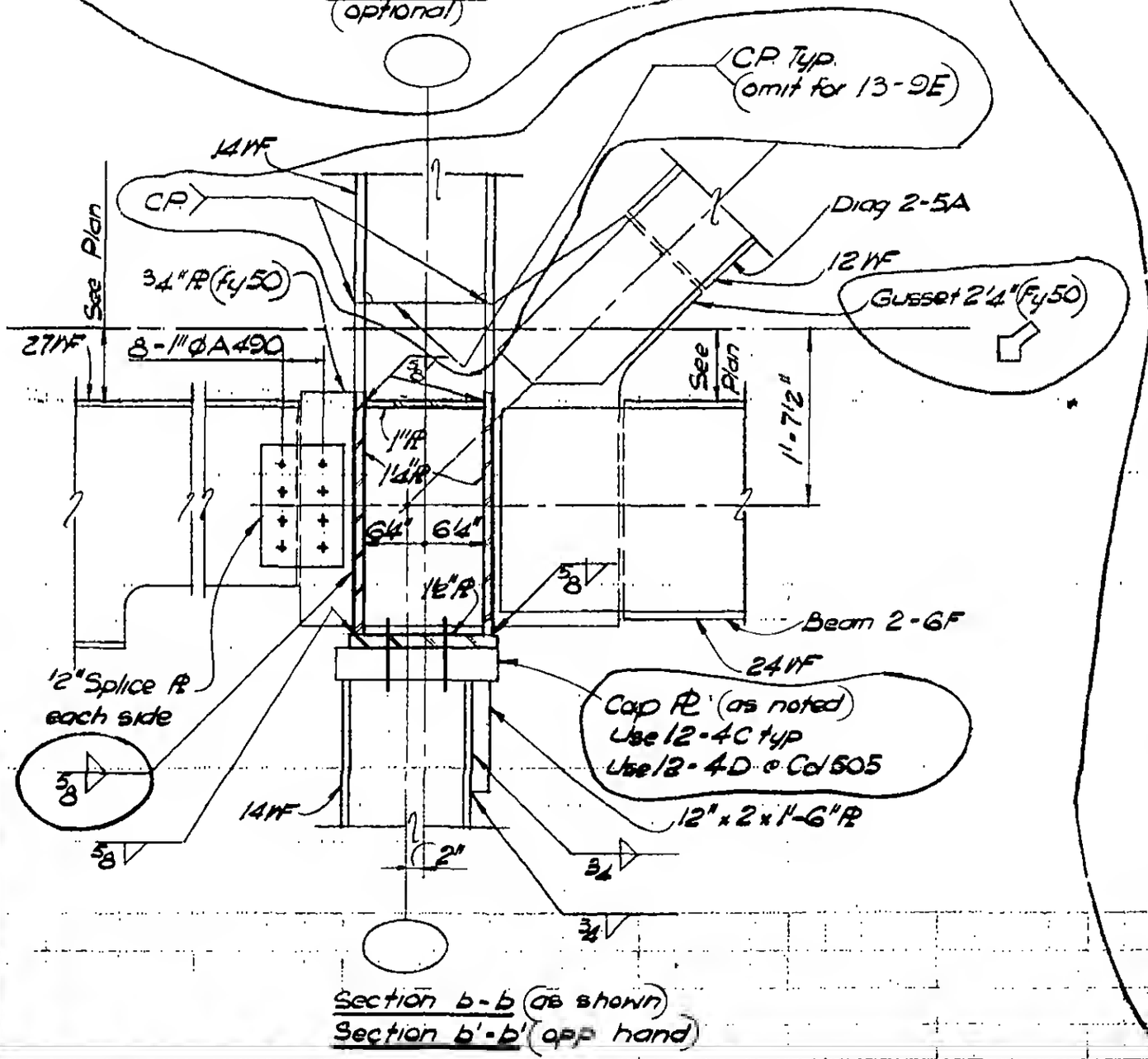

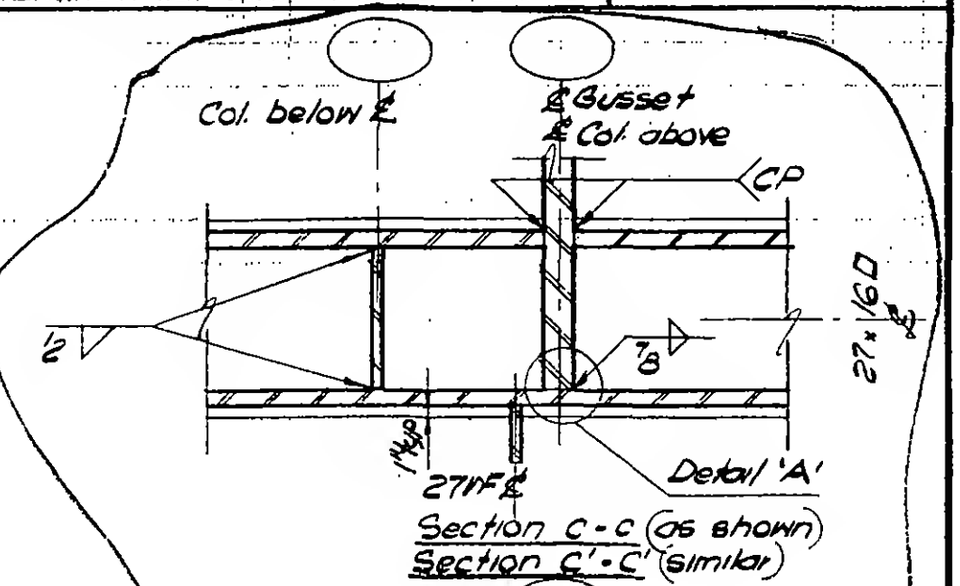

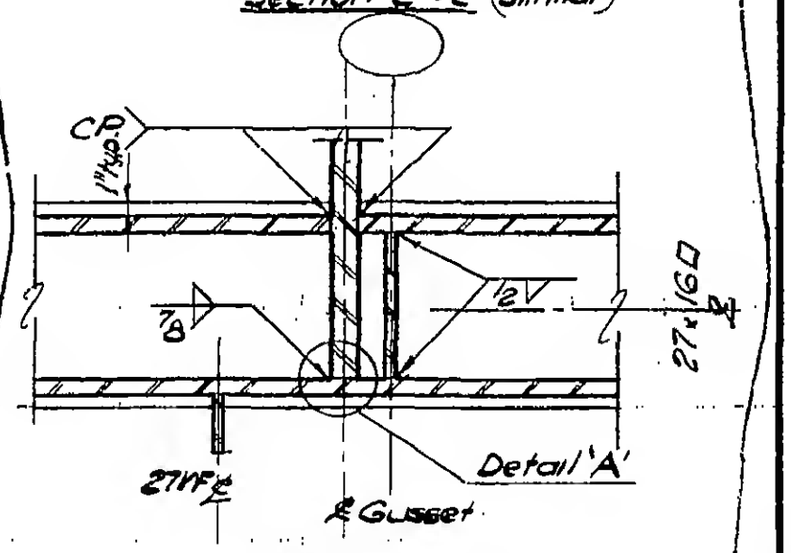

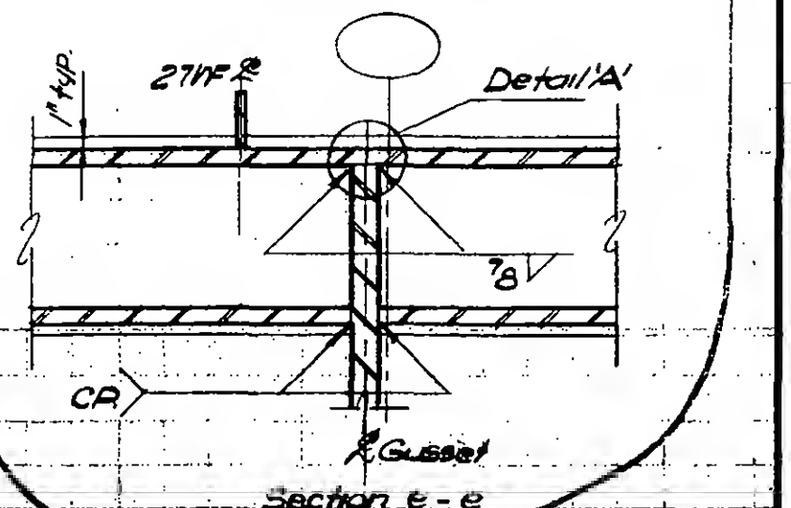

LICENSED PROFESSIONAL ENGINEER
LESLIE E. ROBERTSON
No. 34860
UNIVERSITY OF THE STATE OF NEW YORK

DESIGNED: J. Quirko

DRAWN: M. Clarke

REVIEWED: E. Dvarkos

9-AB/3-9.3