SKILLING, HELLE, CHRISTIANSEN, ROBERTSON — Structural & Civil Engineers

PROJECT: THE WORLD TRADE CENTER | TITLE: FL. 107 - PH. CONNECTION DETAILS - FL 107 | DATE: 4-1-'70

REVISIONS
5/27/70

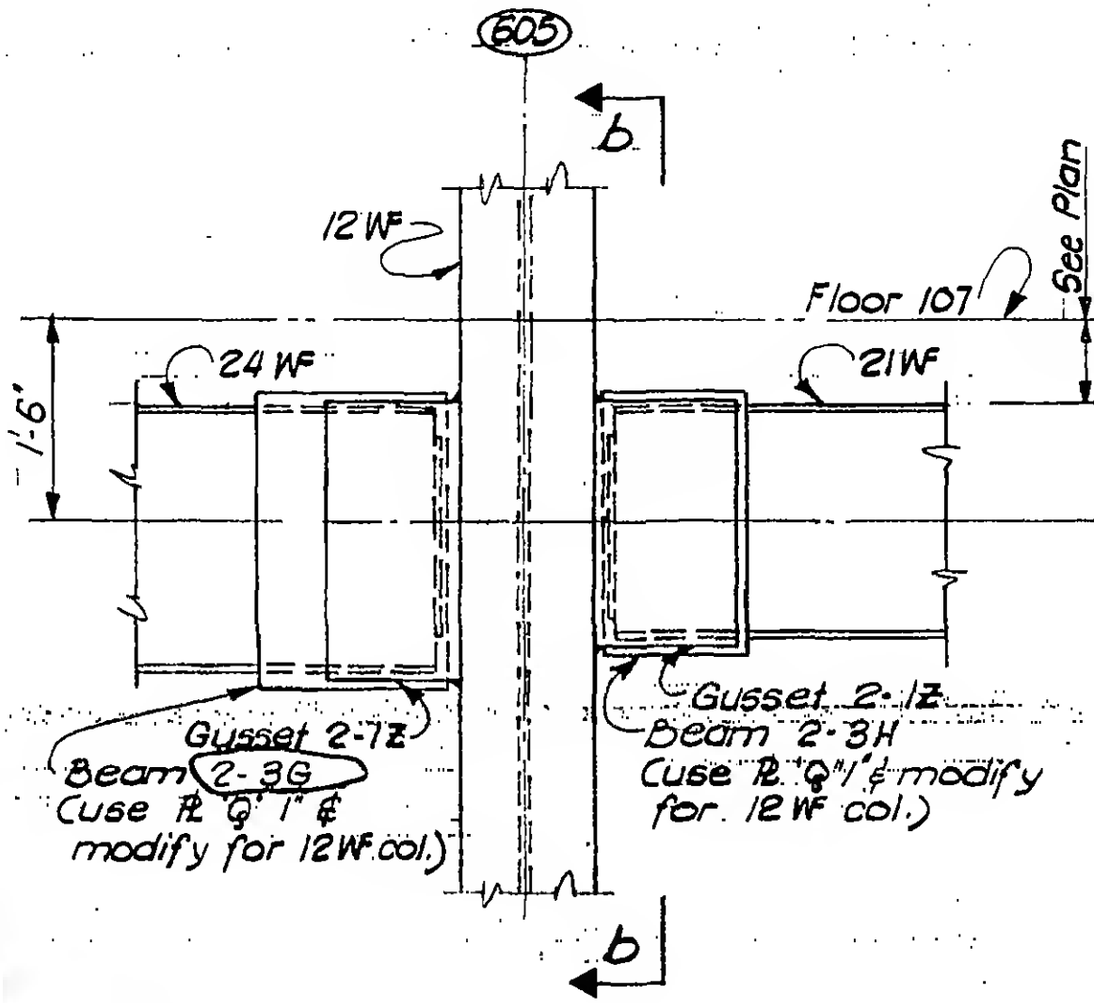

Section a-a

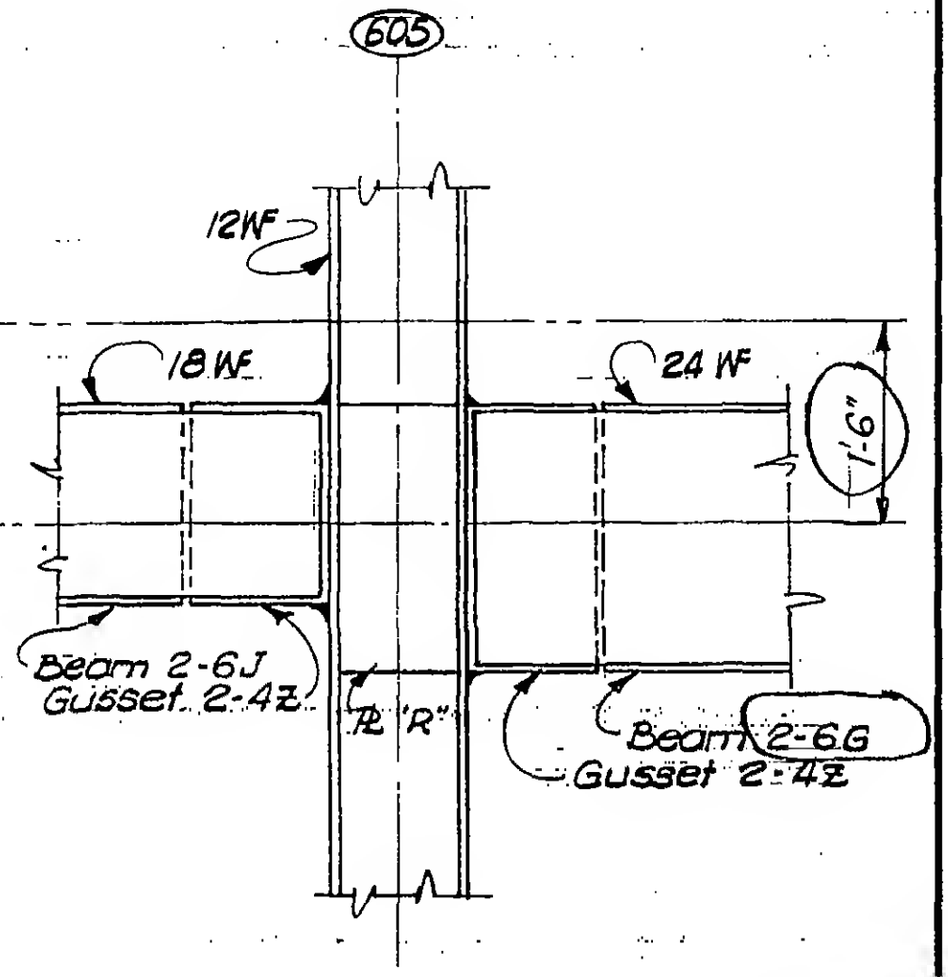

Section b-b

Detail 13-9K

LICENSED PROFESSIONAL ENGINEER — LESLIE E. ROBERTSON — No. 34360 — UNIVERSITY OF THE STATE OF NEW YORK

DESIGNED: J. Quirk
DRAWN: M. Nichols
REVIEWED: E. Drakos

9-AB13-9.6