SKILLING, HELLE, CHRISTIANSEN, ROBERTSON — Structural & Civil Engineers

PROJECT: THE WORLD TRADE CENTER | TITLE: FLOOR 107=PH CONNECTION DETAIL - FL 107 | DATE: 4-1-70

REVISIONS

5/27/70

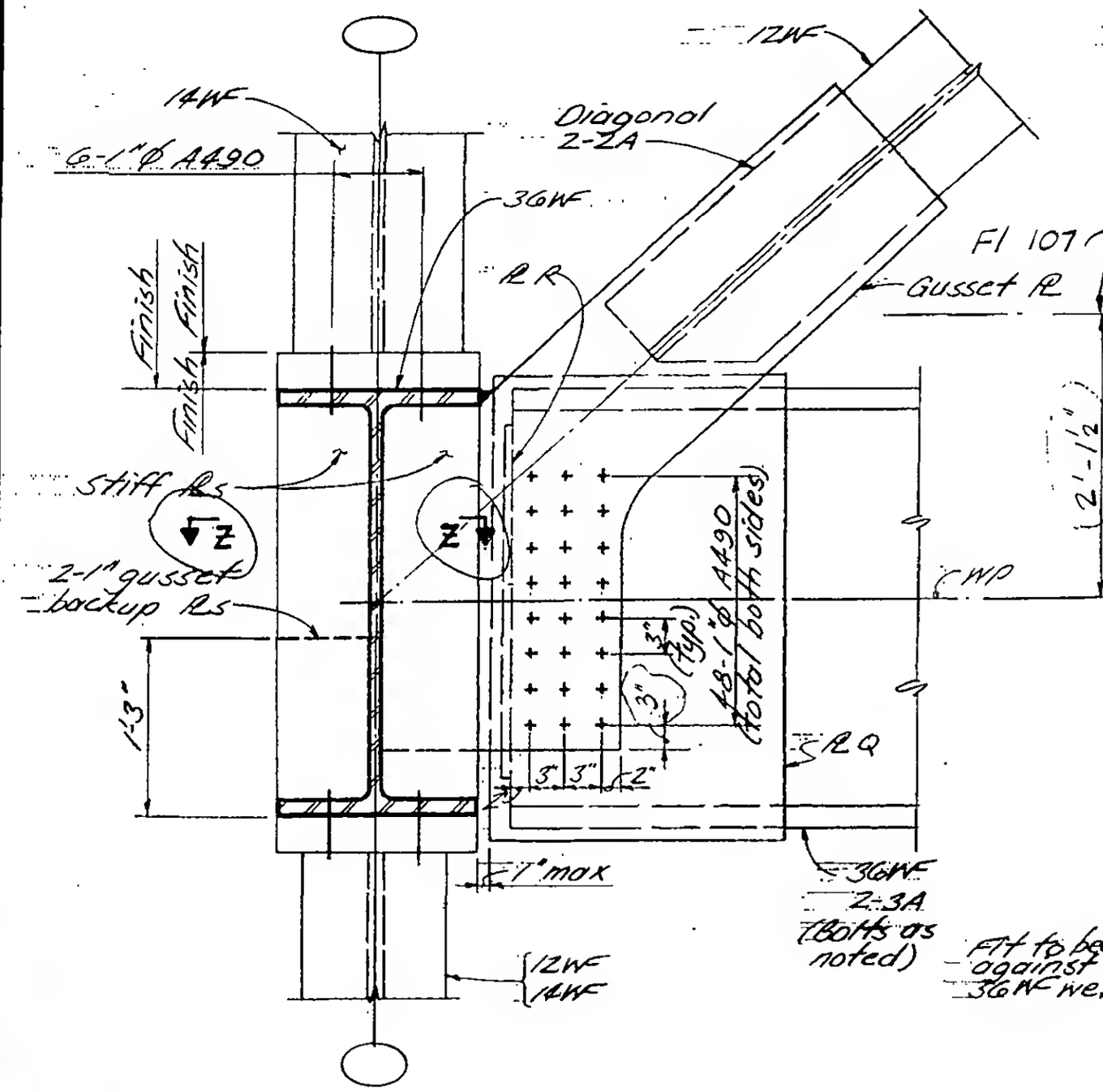

Section U-U

Section V-V (opp. hand)

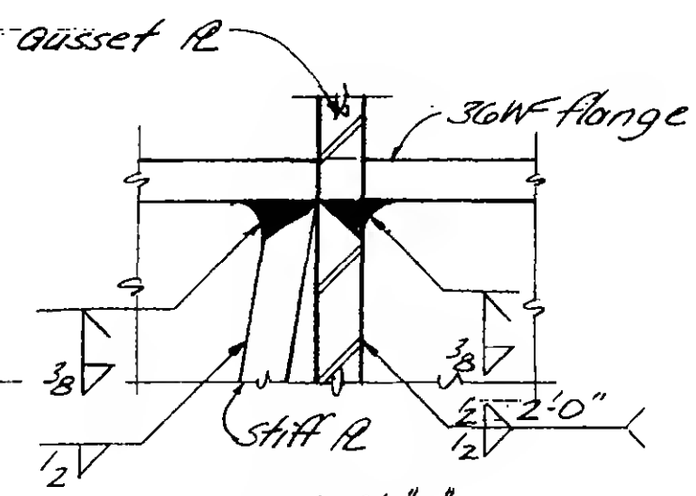

Detail "A"

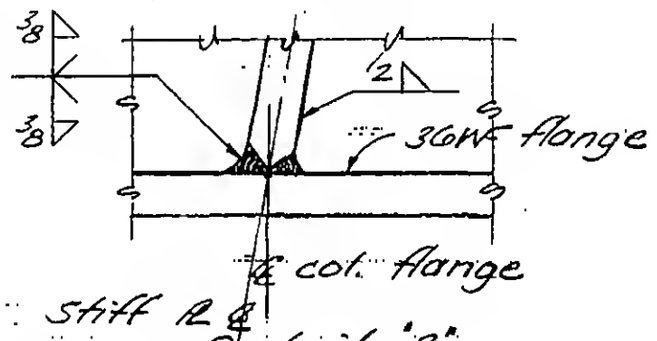

Detail "B"

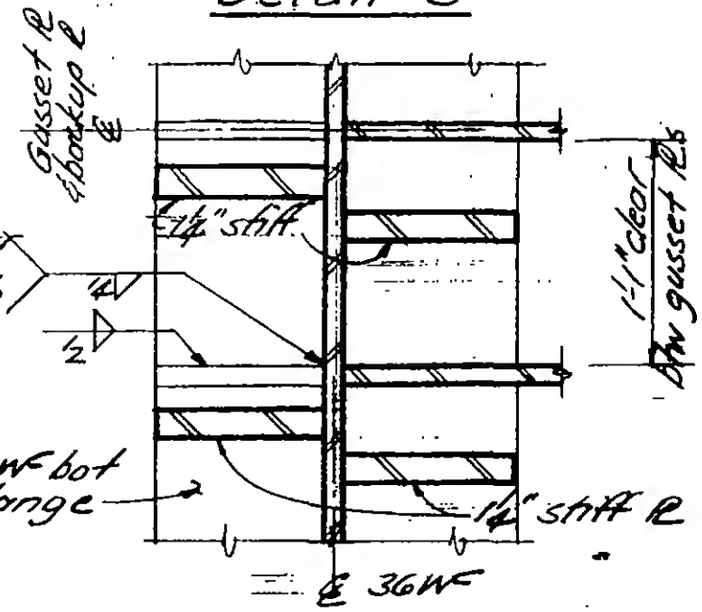

Section Z-Z

LICENSED PROFESSIONAL ENGINEER — LESLIE E. ROBERTSON — No. 34360 — UNIVERSITY OF THE STATE OF NEW YORK

DESIGNED: L. Quirko

DRAWN: J. Adams

REVIEWED: E. Dranos

9-AB13-10.5